Protected by copyright. Copying for private or commercial purposes, in part or in whole, is not permitted unless authorised by Volkswagen AG. Volkswagen AG does not guarantee or accept any liability with respect to the correctness of information in this document. Copyright by Volkswagen AG.

Workshop Manual

Polo Classic 1996 ➤
Polo Variant 1998 ➤

Electrical system Polo Classic from 2000, Polo Variant from 2000

Edition 05.2005

satelettronica

List of Workshop Manual Repair Groups

Repair Group

01 - Self-diagnosis
27 - Starter, current supply, CCS
90 - Gauges, instruments
92 - Windscreen wash/wipe system
94 - Lights, bulbs, switches - exterior
96 - Lights, bulbs, switches - interior
97 - Wiring

satelettronica

Copyright © 2015 Volkswagen AG. Volkswagen AG does not guarantee or accept any liability with respect to the correctness of information in this document. Copying for private or commercial purposes, in part or in whole, is not permitted unless authorised by Volkswagen AG.

Technical information should always be available to the foremen and mechanics, because their careful and constant adherence to the instructions is essential to ensure vehicle road-worthiness and safety. In addition, the normal basic safety precautions for working on motor vehicles must, as a matter of course, be observed.

All rights reserved.
No reproduction without prior agreement from publisher.

Copyright © 2015 Volkswagen AG, Wolfsburg

K0056569720

Contents

01 - Self-diagnosis . . . 1

1 **Vehicle diagnosis, testing and information systems** . . . 1
1.1 Connecting vehicle diagnosis, testing and information system VAS 5051A . . . 2
2 **Immobilizer self-diagnosis** . . . 4
2.1 Performing immobilizer self-diagnosis . . . 4
2.2 Fault table . . . 9
2.3 Reading data block . . . 11
2.4 Coding immobilizer control unit J362 . . . 16
3 **Guided functions for immobilizer** . . . 18
3.1 Observe additional information and perquisites for “online request with GeKo-VW” . . . 18
3.2 Online system test . . . 19
3.3 Adaptation of ignition keys . . . 19
3.4 Adaption (matching) after changing engine control unit . . . 20
3.5 Adapting immobilizer . . . 20
4 **Self-diagnosis of dash panel insert** . . . 21
4.1 Performing self-diagnosis of dash panel insert . . . 21
4.2 Fault table . . . 26
4.3 Final control diagnosis . . . 29
4.4 Code control unit . . . 31
4.5 Read data block . . . 33
4.6 Adaption . . . 37
5 **Data bus diagnostic interface** . . . 45
5.1 Performing self-diagnosis of data bus diagnostic interface J533 . . . 45
5.2 Fault table . . . 49
5.3 Coding data bus diagnostic interface J533 . . . 50
5.4 Reading data block . . . 51

27 - Starter, current supply, CCS . . . 55

1 **Battery** . . . 55
1.1 Fundamentals for batteries . . . 55
1.2 Battery handling instructions . . . 55
1.3 Visual check . . . 56
1.4 Checking battery via magic eye . . . 56
1.5 Batteries with magic eye and no cell sealing plugs . . . 57
1.6 Batteries with magic eye and sealed cell plugs . . . 57
1.7 Batteries with no magic eye . . . 61
1.8 Charging battery . . . 64
1.9 Battery load test . . . 66
2 **Removing and installing battery** . . . 68
2.1 Removing and installing battery . . . 68
3 **Disconnecting and reconnecting batteries** . . . 70
3.1 Disconnecting battery . . . 70
3.2 Fuse holder on battery . . . 70
3.3 Connecting battery . . . 71
3.4 Installing fuse holder on battery . . . 72
3.5 Steps after connecting battery . . . 72
4 **Starter** . . . 74
4.1 Removing and installing starter (1.4 l petrol engine) . . . 74
4.2 Removing and installing starter (1.6 l, 1.8 l petrol engines and diesel engines) . . . 75
5 **Alternator** . . . 78
5.1 Assembly overview . . . 78
5.2 Poly-V-belt drives . . . 86

Protected by copyright. Copyright by Volkswagen AG.
Copyright by Volkswagen AG. Volkswagen AG does not guarantee or accept any liability with respect to the correctness of information in this document. Copying or distribution is not permitted unless authorised by Volkswagen AG.
satelettronica

5.3 Checking V-belt . . . 87
5.4 Checking poly-V-belt . . . 88
5.5 Removing and installing poly-V-belt . . . 88
5.6 Compact alternator with poly-V-belt drive . . . 93
5.7 Checking alternator carbon brushes . . . 94
5.8 Removing and installing voltage regulator for alternator . . . 94
5.9 Installing poly-V-belt pulley with freewheel . . . 94

90 - Gauges, instruments . . . 97

1 Dash panel insert . . . 97
1.1 Renewing dash panel insert . . . 97
1.2 Removing and installing dash panel insert . . . 97
1.3 Description of back of dash panel insert . . . 98
1.4 Pin assignment of connections on dash panel insert . . . 100
1.5 Warning lamp symbols in dash panel insert . . . 101
1.6 Description of instruments . . . 103

2 Service interval display . . . 104
2.1 Resetting service interval display . . . 104

92 - Windscreen wash/wipe system . . . 105

1 Windscreen wiper system . . . 105
1.1 Assembly overview - windscreen wiper system . . . 105
1.2 Removing and installing windscreen wiper system . . . 105
1.3 Removing and installing wiper rubber blade . . . 110

2 Windscreen washer and headlight washer system . . . 111
2.1 Assembly overview - windscreen washer and headlight washer system . . . 111
2.2 Adjusting windscreen washer system jets . . . 111
2.3 Adjusting headlight washer system jets . . . 112
2.4 Removing windscreen washer system spray jets . . . 113
2.5 Removing headlight washer system spray jets . . . 113
2.6 Removing windscreen washer and headlight washer system reservoir . . . 113

3 Rear window wipe/wash system . . . 115
3.1 Assembly overview - rear window wiper system . . . 115
3.2 Adjusting rear window wiper park position . . . 115
3.3 Adjusting washer jet . . . 116
3.4 Removing rear window wiper . . . 117

94 - Lights, bulbs, switches - exterior . . . 119

1 Headlight . . . 119
1.1 Assembly overview - headlight . . . 119
1.2 Removing and installing headlight . . . 120
1.3 Replacing headlight bulb . . . 120
1.4 Removing and installing headlight range control motor . . . 121
1.5 Adjusting headlights . . . 121

2 Front fog lights . . . 122
2.1 Removing and installing fog light . . . 122
2.2 Removing and installing fog light bulb . . . 122

3 Front turn signals . . . 123
3.1 Removing and installing front turn signal . . . 123
3.2 Removing and installing turn signal bulb . . . 123

4 Side mounted repeater turn signals . . . 124
4.1 Removing and installing side mounted repeater turn signal . . . 124

5 Tail lights . . . 125
5.1 Assembly overview - tail light (Polo Classic) . . . 125
5.2 Assembly overview - tail light (Polo Variant) . . . 126

Copyright by Volkswagen AG. Provided by Volkswagen AG. Reproduction or publication of this manual in whole, in part or in any form is not authorised by Volkswagen AG. Volkswagen AG does not guarantee or accept any liability with respect to the correctness of information in this document.
satelettronica

Private and non-commercial purposes, in part or in whole, is not permitted unless authorised by Volkswagen AG. Volkswagen AG does not guarantee or accept any liability with respect to the correctness of information in this document. Copyright by Volkswagen AG.

5.3 Removing and installing tail light bulb holder (Polo Variant) . . . 127
5.4 Removing and installing tail light bulb holder (Polo Classic) . . . 127

6 Number plate lights . . . 128
6.1 Removing and installing number plate light . . . 128
6.2 Replacing number plate light bulb . . . 128

7 Additional brake lights . . . 129
7.1 Additional brake light (Polo Classic) . . . 129
7.2 Additional brake light (Polo Variant) . . . 129

8 Steering column switch and ignition and starter switch . . . 131
8.1 Assembly overview - steering column . . . 131
8.2 Removing and installing steering column switch . . . 132
8.3 Pin assignment on steering column switch . . . 134
8.4 Removing and installing steering lock housing . . . 134
8.5 Removing and installing lock cylinder . . . 136
8.6 Removing and installing ignition / starter switch . . . 137
8.7 Pin assignment for ignition switch . . . 137

96 - Lights, bulbs, switches - interior . . . 138

1 Immobilizer . . . 138
1.1 Assembly overview - immobilizer . . . 138
1.2 Removing and installing immobilizer control unit . . . 139
1.3 Immobilizer reader coil D2 . . . 139
1.4 Transponder . . . 139

2 Interior lights and switches . . . 140
2.1 Assembly overview - switches in dash panel . . . 140
2.2 Removing and installing light switch E1 . . . 140
2.3 Removing and installing headlight range control regulator E102 with switches and instruments illumination regulator E20 . . . 141
2.4 Removing and installing switches in centre of dash panel . . . 142
2.5 Removing and installing hazard warning light switch E3 . . . 142
2.6 Interior light . . . 143
2.7 Removing and installing glove compartment light W6 . . . 144
2.8 Removing and installing sliding sunroof adjustment regulator E139 . . . 144
2.9 Removing and installing mirror adjustment switch E43 with mirror adjustment change-over switch E48 . . . 145
2.10 Removing and installing door contact switch . . . 145
2.11 Removing and installing luggage compartment light switch . . . 146
2.12 Removing and installing luggage compartment light W3 . . . 146

97 - Wiring . . . 147

1 Removing and installing relay plate, coupling station and fuse holder . . . 147
1.1 Removing and installing relay carrier . . . 147
1.2 Removing and installing coupling station behind relay carrier . . . 149
1.3 Removing and installing fuse holder in front left footwell . . . 150

2 Wiring harness and connector repairs . . . 152
2.1 Notes on safety . . . 152
2.2 General notes concerning repairs to vehicle electrical system . . . 152
2.3 Notes on repairs to wiring harness and connectors . . . 152
2.4 Supplementary notes on repair of CAN bus wiring . . . 153
2.5 Wiring harness repair set V.A.G 1978 . . . 153

3 Renewal of aerial wiring . . . 155
3.1 General description . . . 155
3.2 Assembly overview - aerial wire . . . 155
3.3 Installing a new aerial wire . . . 155

satelettronica

Protected by copyright. Copying for private or commercial purposes, in part or in whole, is not permitted unless authorised by Volkswagen AG. Volkswagen AG does not guarantee or accept any liability with respect to the correctness of information in this document. Copyright by Volkswagen AG.

satelettronica

01 – Self-diagnosis

1 Vehicle diagnosis, testing and information systems

WARNING

- *During testing or measuring operations using a vehicle diagnosis information system, there is a risk of serious or even fatal injury!*
- *If the vehicle diagnosis information system is lodged in the activity area of an airbag during a testing or measuring operation, a triggered airbag can result in serious or even fatal injury!*
- *During testing and measuring operations, work with a second person who can operate the vehicle diagnosis information system from one of the back seats.*

Note

- *All the operations described, e.g. adaption, coding etc. can be performed using the vehicle diagnosis, testing and information system -VAS 5051A- , the vehicle diagnosis, testing and information system -VAS 5051B- or the vehicle diagnosis and service information system -VAS 5052- .*
- *Additional information:*

⇒ Self-study programme No. 202 ; Vehicle Diagnosis, Testing and Information System VAS 5051

⇒ Self-study programme No. 256 ; VAS 5052

⇒ Self-study programme No. 294 ; Online connection of VAS 5051

⇒ Self-study programme No. 295 ; Diagnosis with VAS 5051, VAS 5052 or VAS 5053

– Connecting vehicle diagnosis, testing and information system -VAS 5051A- ⇒ page 2 .

Note

All other and the following vehicle diagnosis, testing and information systems or vehicle diagnosis and service information systems are connected accordingly as described in the chapter "Connecting vehicle diagnosis, testing and information system VAS 5051A".

satelettronica
Copyright by Volkswagen AG. Volkswagen AG does not guarantee or accept any liability with respect to the correctness of information in this document. Copying for private or commercial purposes, in part or in whole, is not permitted unless authorised by Volkswagen AG.

Protected by copyright. Copyright by Volkswagen AG. Volkswagen AG does not guarantee or accept any liability with respect to the correctness of information in this document. Copyright by Volkswagen AG. Volkswagen AG authorised partners are not permitted to use this document for commercial purposes.

1.1 Connecting vehicle diagnosis, testing and information system -VAS 5051A-

Note

Observe the latest operating instructions for vehicle diagnosis, testing and information system -VAS 5051A- , which are displayed after selecting the "Administration" and "Operating Manual" buttons.

Special tools and workshop equipment required

- Vehicle diagnosis, testing and information system -VAS 5051A-

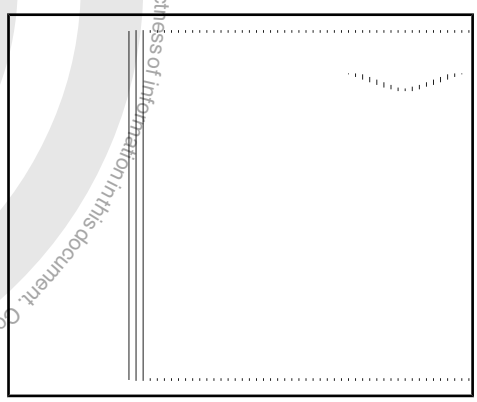

- Diagnosis cable -VAS 5051/6A- (5 m)

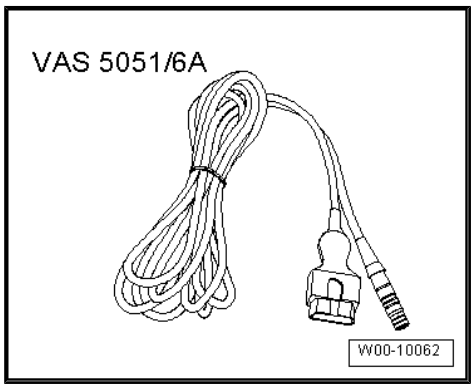

- Diagnosis cable -VAS 5051/5A- (3 m)

Note

Only these cables are to be used for diagnosis, as they are the only ones fitted with CAN wiring and therefore allowing CAN diagnosis and/or CAN communication.

Connecting vehicle diagnosis, testing and information system -VAS 5051A- :

– Apply handbrake.

– Vehicles with an automatic gearbox, move selector lever to position "P" or "N".

– Vehicles with manual gearbox, move gearstick to neutral position.

– Remove ashtray.

satelettronica

– With ignition switched off, connect vehicle diagnosis, testing and information system -VAS 5051A- using diagnosis cable -VAS 5051/6A- to diagnostic interface -arrow- in vehicle.
– Switch on ignition.
– Switch off all electrical consumers.

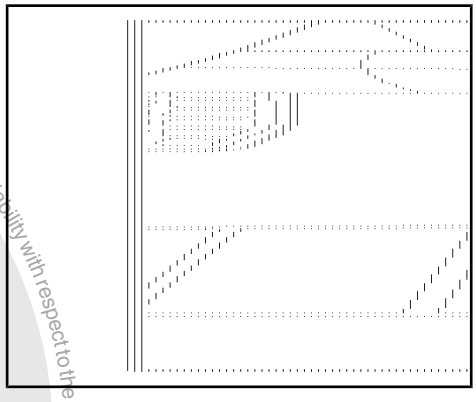

Protected by copyright. Copyright for private or commercial purposes, in part or in whole, is not permitted unless authorised by Volkswagen AG. Volkswagen AG does not guarantee or accept any liability with respect to the correctness of information in this document. Copyright by Volkswagen AG.
satelettronica

2 Immobilizer self-diagnosis

Note

- *In Germany the "online request with GeKo-VW" replaces the request of the 7 character PIN as of 01.07.2004.*
- *In other countries the "online request" replaces the request of the 7 character PIN as of 01.10.2004.*
- *Immobilizer self-diagnosis is now only possible with vehicle diagnosis, testing and information system -VAS 5051 A- or the vehicle diagnosis and service information system -VAS 5052- .*
- *Not all self-diagnosis functions are possible due to the change-over to "online request with GeKo-VW".*
- *The functions which are no longer possible are replaced by the programs in "guided functions"* *⇒ page 5* *.*

General description:

Second generation immobilizers are installed on vehicles up to 09.99.

Communications between the immobilizer control unit and the engine control unit take place on the W-wire.

The third generation of immobilizer was introduced from 10.99.

Depending on engine fitted there are two different versions installed.

On one version the immobilizer control unit and engine control unit communicate with one another via the data bus, on the other versions this communication is via the W-wire.

The corresponding communication method should be determined beforehand using the display group 001 ⇒ page 14 via the Read data block function ⇒ page 11 .

Communications are implemented via the W-wire if the first display zone contains the Baud rate in the form of a number.

On the other hand the text "data bus" means communication via the data bus.

The immobilizer electronics consist of:

- An immobilizer control unit.
- An adapted (matched) engine control unit.
- A reader coil on ignition lock.
- And adapted (matched) ignition keys with electronic components (transponder and response reader memory).

2.1 Performing immobilizer self-diagnosis

Note

- *Not all self-diagnosis functions are possible due to the change-over to "online request with GeKo-VW".*
- *The functions which are no longer possible are replaced by the programs in "guided functions"* *⇒ page 5* *.*

Protected by copyright. Copyright by Volkswagen AG. Volkswagen AG does not guarantee or accept any liability with respect to the correctness of information in this document. Copyright by Volkswagen AG.
satelettronica

2.1.1 Initiating immobilizer self-diagnosis

– Connect vehicle diagnosis, testing and information system - VAS 5051A- ⇒ page 1 or vehicle diagnosis and service information system -VAS 5052- ⇒ page 1 .

Indicated on display:

– Press key on screen for “vehicle self-diagnosis” -arrow-.

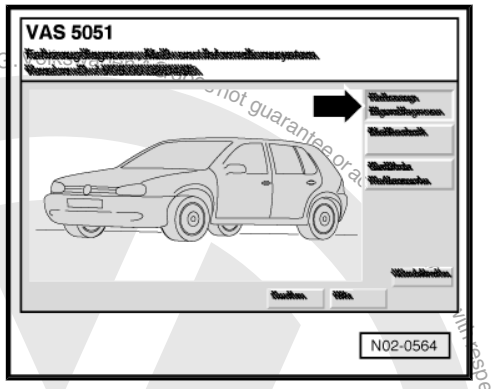

Indicated on display:

– Press “25 - Immobilizer” on screen -arrow-.

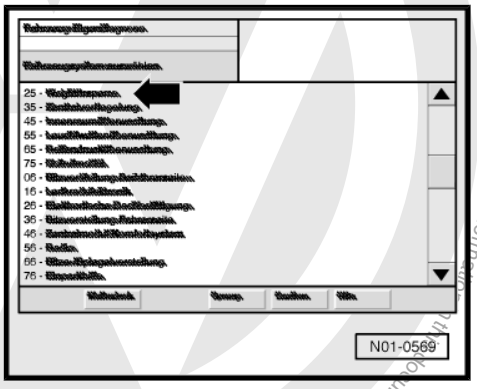

Indicated on display:

The control unit identification and the code are displayed.

- Selected address word.
- Control unit part no.
- System designation (IMMO), version number.
- Code number[1].
- Dealership number[2].

1) Depending on engine, gearbox and optional equipment.

2) Will be automatically stored in the control unit when entering the system.

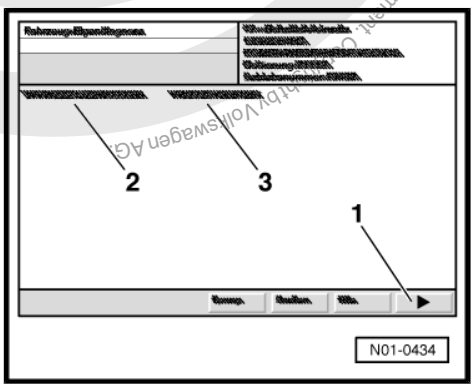

The display also shows the 17-digit chassis number (WVW....) -2- and the 14-digit identification number (VW....) -3-.

– Press the arrow key -1- in the display.

2.1.2 Overview of functions available in self-diagnosis

– Initiating immobilizer self-diagnosis ⇒ page 5 .

Protected by copyright. Copying for private or commercial purposes, in part or in whole, is not permitted unless authorised by Volkswagen AG. Volkswagen AG does not guarantee or accept any liability with respect to the correctness of information in this document. Copyright by Volkswagen AG.
satelettronica

Indicated on display:

Functions	Page
02 - Reading fault memory	⇒ page 6
05 - Erasing fault memory	⇒ page 7
06 - Ending output	⇒ page 8
07 - Code control unit	⇒ page 16
08 - Read data block	⇒ page 11

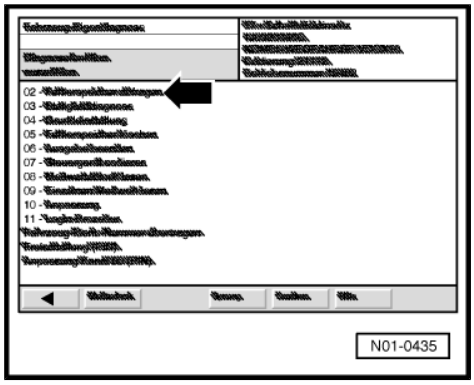

Note

The following functions are no longer possible in self-diagnosis but are replaced by the programs in "Guided functions".

- 10 - Adaption
- Transfer vehicle identification number
- Enable (PIN)
- Adaptation of channel 50 (PIN)

"Guided functions" ⇒ page 18 .

2.1.3 Reading fault memory

– Initiating immobilizer self-diagnosis ⇒ page 5 .

Indicated on display:

– Press "02 - Read fault memory" on screen -arrow-.

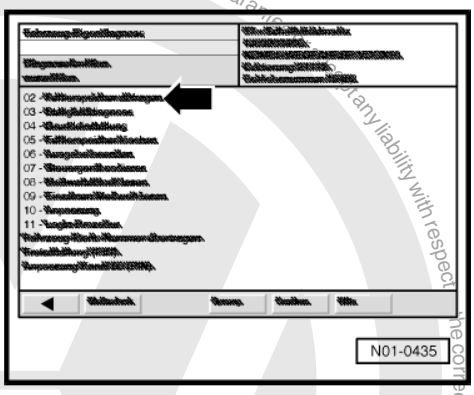

Note

The displayed fault information is only updated when the self-diagnosis is started or the function 05 "Erase fault memory" is selected. The information is not continuously updated.

Any stored faults are shown on the display:

– Press "Print" key on display -arrow- and then on "Screen" in subsequent print menu.

The printer of the vehicle diagnosis, testing and information system -VAS 5051A- then prints out either the faults displayed on the screen or "0 faults recognised". Repair measures are required if any faults are stored. The fault print-out is needed for the repairs.

– End output ⇒ page 8 .

Protected by copyright. Copying for private or commercial purposes, in part or in whole, is not permitted unless authorised by Volkswagen AG. Volkswagen AG does not guarantee the correctness of any liability with respect to the contents, in part or in whole, is not permitted unless authorised by Volkswagen AG.
Copyright by Volkswagen AG.
satelettronica

2.1.4 Erasing fault memory

Note

After erasing the fault memory its contents will be automatically displayed. If the fault memory cannot be erased, read the fault memory again and repair any faults found.

Prerequisites:

- Fault memory read ⇒ page 6 .
- All faults repaired.

After subsequent reading of fault memory, indicated on display:

– Press “05 - Erase fault memory” on screen -arrow-.

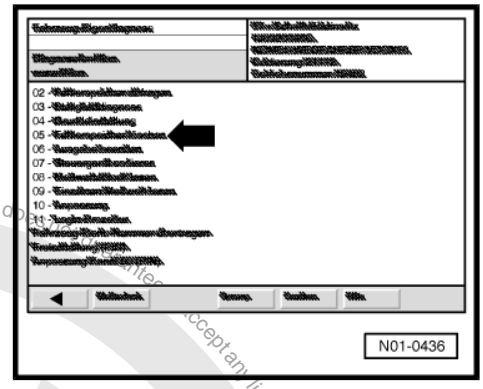

Indicated on display:

– Confirm the message -arrow-.

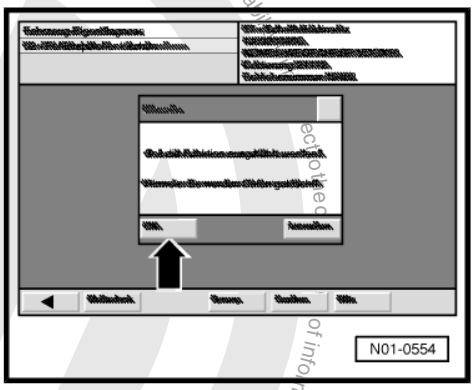

Indicated on display:

The fault memory is now erased.

– End output ⇒ page 8 .

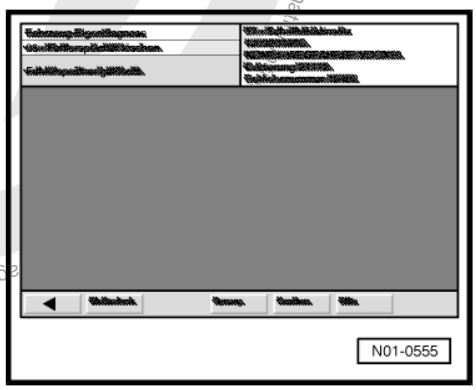

Protected by copyright. Copying for private or commercial purposes, in part or in whole, is not permitted unless authorised by Volkswagen AG. Volkswagen AG does not accept any liability for the accuracy of information contained in electronic data processing systems.
satelettronica

2.1.5 Ending output

Indicated on display:

– Press “GoTo” on the display -arrow-.

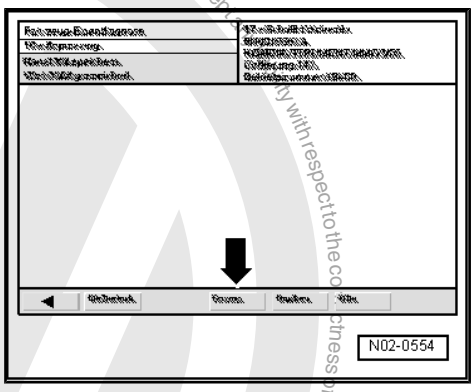

Indicated on display:

– Press “End” on the display -arrow-.
– Press “End” key in “exit menu”.
– Switch ignition off and disconnect diagnosis connector.

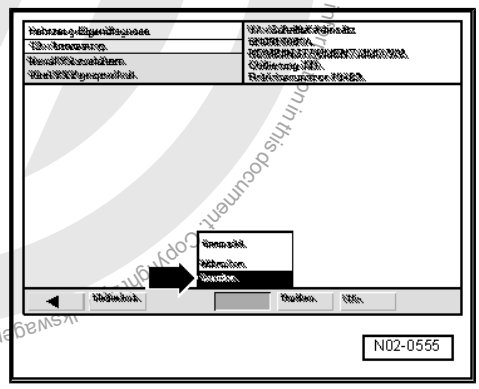

Protected by copyright. Copying for private or commercial purposes, in part or in whole, is not permitted unless authorised by Volkswagen AG. Volkswagen AG does not guarantee or accept any liability with respect to the correctness of information in this document. Copyright by Volkswagen AG.

satelettronica

2.2 Fault table

Note

- *In addition after repairs, always read fault memory of engine control unit to erase content "Engine control unit blocked" of fault memory.*
- *Other stored faults must be evaluated and rectified if necessary*
- *All 'static' and 'sporadic' faults are stored in the fault memory. A fault is recognized as 'static' if it is present for a minimum of 2 seconds. If a fault is then no longer present it is stored as a 'sporadic' fault.*
- *After switching on the ignition, any faults stored are initially set to 'sporadic' and are then changed to 'static' if they are still present after the check has been completed.*
- *If a 'sporadic' fault is no longer present during the next 50 driving cycles (ignition on for a minimum of 2 seconds) it is erased.*
- *The list below contains all possible faults which can be recognised by the immobilizer control unit -J362- and indicated on the display of the vehicle diagnosis, testing and information system -VAS 5051A- or vehicle diagnosis and service information system -VAS 5052- , listed according to 5-digit fault code.*
- *Before renewing a component shown as faulty, check wiring and connections to the component as well as earth connections referring to current flow diagram.*
- *Correct seating of connections and locking devices on relay plate must also be checked.*
- *After repairs, always read the fault memory again with the vehicle diagnosis, testing and information system -VAS 5051 A- or vehicle diagnosis and service information system -VAS 5052- and erase, then subsequently read the fault memory.*

Indicated on display	Possible fault cause	Fault elimination
No fault recognized!	The self-diagnosis is finished If "No fault recognized" appears after completing repairs.	
00546 Data wiring defective. Implausible signal.	No signal or implausible signal on the "W" wiring between the immobilizer control unit and the engine control unit or the fuel shut-off valve control unit.	– Check wiring for open circuit or short circuit.
	The baud rate (data transmission rate) of the immobilizer control unit is incorrect.	– Code the control unit and input the correct baud rate ⇒ page 16 .
	Incorrect operation: The ignition was immediately switched back on after stopping the engine (i.e. during the shutdown phase).	– Switch ignition off, wait at least 10 seconds, switch ignition back on and then select function 02 "Read fault memory" again ⇒ page 6 .
	Immobilizer control unit -J362- defective.	– Erase fault memory ⇒ page 7 and read memory again ⇒ page 6 . – Replace immobilizer control unit -J362- if necessary.
01128		

Protected by copyright. Copying for private or commercial purposes, in whole, is not permitted unless authorised by Volkswagen AG. Volkswagen AG does not guarantee or accept any liability with respect to the correctness of information in this document. Copyright by Volkswagen AG.

satelettronica

Indicated on display	Possible fault cause	Fault elimination
Immobilizer reader coil -D2-	3-pin connector not connected at control unit or reader coil and wiring defective. Immobilizer control unit -J362- defective.	– Check connector, reader coil and wiring (visual check), if necessary renew reader coil. – Erase fault memory ⇒ page 7 and read memory again ⇒ page 6 . – Replace immobilizer control unit -J362- if necessary.
01176 Key Signal too low.	Reader coil or wire defective (contact resistance/loose contact). Electronic component in ignition key (transponder) missing or does not work. Wrong transponder type in ignition key.	– Check reader coil with wiring and connector (visual check), if necessary renew reader coil. – Renew ignition key, perform new adaptation for all ignition keys and check operation ⇒ page 19 .
Not authorized.	Key fits mechanically, but adaptation routine has not been performed.	– Re-match all ignition keys and check operation ⇒ page 19 .
01177 Engine control unit. Not authorized.	Adaptation routine not performed for engine control unit or fuel shut-off valve control unit. W-wire between the control units is OK.	– Perform adaptation routine for engine control unit or fuel shut-off valve control unit ⇒ page 20 .
01179 Key programming incorrect.	Ignition key adaptation is faulty. Electronic component in ignition key (transponder) missing or does not work. Wrong transponder type in ignition key.	– Re-match all ignition keys and check operation ⇒ page 19 . – Renew ignition key, perform new adaptation for all ignition keys and check operation ⇒ page 19 .
01181 Initialisation: only 2 keys learned.	During initial adaptation the ignition was switched on a third time with one of the ignition keys for longer than 1 second. Only two ignition keys can be adapted during initial adaptation.	– Erase fault memory ⇒ page 7 and read memory again ⇒ page 6 .
01202 Diagnosis cable. Short circuit.	Short circuit between wires of connector, 6-pin, chambers 2 and 3 (“W” and “K”) on immobilizer control unit -J362- . Short circuit between wires of connector, 8-pin, chambers 7 and 8 (“W” and “K”) on immobilizer control unit -J362- . Short circuit between wires of connector, 10-pin, chambers 7 and 8 (“W” and “K”) on immobilizer control unit -J362- . Immobilizer control unit -J362- defective.	– Check connection and, if necessary, rectify fault referring to current flow diagram. – Check connection and, if necessary, rectify fault referring to current flow diagram. – Check connection and, if necessary, rectify fault referring to current flow diagram. – Erase fault memory ⇒ page 7 and read memory again ⇒ page 6 . – Replace immobilizer control unit -J362- if necessary.
01237 Fuel shut-off valve -N109-		

Protected by copyright. Copying for private or commercial purposes, in part or in whole, is not permitted unless authorised by Volkswagen AG. Volkswagen AG does not guarantee or accept any liability with respect to the correctness of information in this document. Copyright by Volkswagen AG.

satelettronica

Indicated on display	Possible fault cause	Fault elimination
Defective.	Fuel shut-off valve control unit or fuel shut-off valve defective.	– Remove fuel shut-off valve control unit and disconnect electric wiring. – Temporarily apply battery voltage (term. 30) to fuel shut-off valve (use measuring tool set -V.A.G 1594/C-): ♦ Fuel shut-off valve clicks audibly ⇒ renew fuel shut-off valve control unit. ♦ Fuel shut-off valve does not click ⇒ renew fuel shut-off valve.
01312 Powertrain data bus. Defective.	Fault in data wiring. Powertrain data bus in Bus off mode.	– Read data block ⇒ page 11 . – Check control unit coding. – Read fault memories of all control units connected to powertrain data bus and rectify any faults. – Check data bus referring to current flow diagram.
01314 Engine control unit. No communications.	Data received from engine control unit via powertrain data bus not OK.	– Read fault memory of engine control unit and rectify any faults. – Check data bus to engine control unit referring to current flow diagram.
65535 Control unit. Defective.	Short circuit between wires of connector, 6-pin, chambers 2 and 3 (“W” and “K”). Short circuit between wires of connector, 8-pin, chambers 7 and 8 (“W” and “K”). Short circuit between wires of connector, 10-pin, chambers 7 and 8 (“W” and “K”). The immobilizer control unit -J362- does not recognise the correct Baud rate (data transfer speed). Immobilizer control unit -J362- cannot communicate via data bus. Immobilizer control unit -J362- defective.	– Rectify fault referring to current flow diagram. – Rectify fault referring to current flow diagram. – Rectify fault referring to current flow diagram. – Replace immobilizer control unit -J362- . – Replace immobilizer control unit -J362- . – Replace immobilizer control unit -J362- .

2.3 Reading data block

– Initiating immobilizer self-diagnosis ⇒ page 5 .

satelettronica

Indicated on display:

– Press “08 - Read data block” on the display -arrow-.

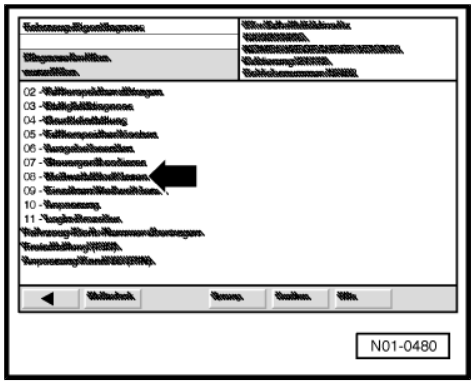

Indicated on display:

– Press number of data block to be read on number block on display -arrow- and confirm entry with Q key.

Example of data block contents

– On the number pad on the display, click on 0, 0 and 1 and then click on the Q key to confirm the entry.

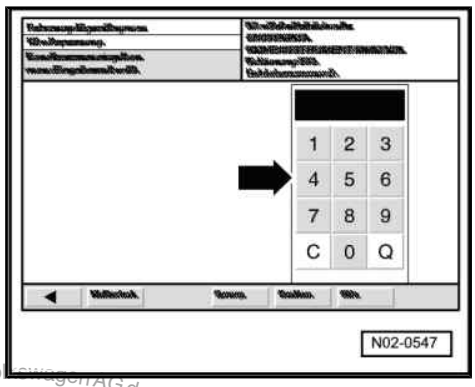

Indicated on display:

If there is a “0” in the first display zone then the reader coil is faulty.

If there is a “1” in the first display zone then the reader coil is OK.

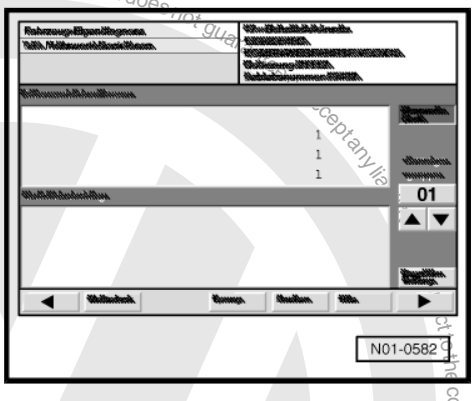

2.3.1 Overview of selectable display groups; significance of display zones and display possibilities, vehicles ▸ 09.99

Overview of selectable display groups:

Display group	Display zone in display
001	1 = No. of keys learned 2 = Reader coil 3 = Key status 4 = Key authorised
002	1 = Key learning time in seconds 2 = Target no. of keys 3 = Actual no. of keys 4 = Status of key adaptation

Protected by copyright. Copyright by Volkswagen AG.
Copyright by Volkswagen AG. Volkswagen AG does not guarantee the correctness of information in this document. Copying for private or commercial purposes, in part or in whole, is not permitted unless authorised by Volkswagen AG. Volkswagen AG does not guarantee the correctness of information in this document. Copyright by Volkswagen AG.
satelettronica

Note

- *The data block always indicates the active status of the immobilizer at the point just after the ignition was switched on.*
- *If an electrical fault occurs which changes this condition after the ignition is switched on, it will not be displayed until the ignition is switched on again and the function "Read data block" is called up.*

Significance of display zones and display possibilities for display group 001:

Display example	Display zone	Possible display
3	1 = Number of learned keys	0 = minimum 8 = maximum
1	2 = Reader coil	0 = faulty 1 = OK
1	3 = Key status	0 = defective 1 = OK
1	4 = Authorised key	0 = no 1 = yes

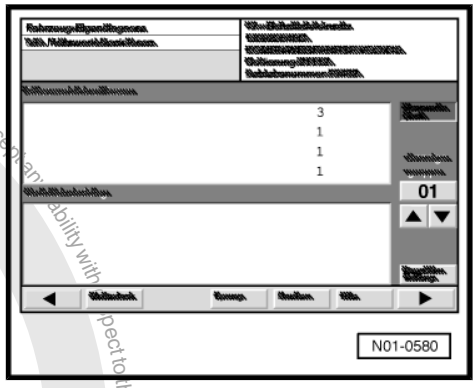

Significance of display zones and display possibilities for display group 002:

Display example	Display zone	Possible display
0.0 s	1 = Key learning time	Learning time in seconds
3	2 = Set number of keys	0 = minimum 8 = maximum
3	3 = Actual number of keys	0 = minimum 8 = maximum
0000	4 = Status of key adaptation ♦ Fault status ♦ Adaption ♦ Current key ♦ Current adaptation	0XXX = no fault 1XXX = fault X0XX = finished X1XX = running XX0X = OK XX1X = not OK XXX0 = OK XXX1 = not OK

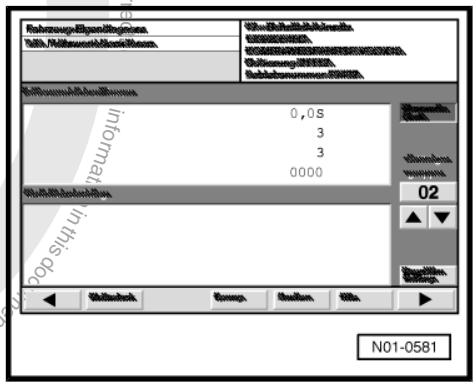

2.3.2 Overview of selectable display groups; significance of display zones and display possibilities, vehicle 10.99 ▸

Overview of selectable display groups:

Display group	Display zone in display
001	1 = Data bus transfer rate[3)] 2 = Reader coil 3 = Key condition 4 = Authorized key
002	1 = Start procedure permitted 2 = Engine control unit responding 3 = Key status OK. 4 = Number of learned keys

satelettronica

Display group	Display zone in display
003	1 = Change code authorized 2 = Key status (transponder) 3 = Authorised fixed code 4 = Immobilizer status
004	1 = Login disable (tester) 2 = Login disable (CAN) 3 = Inoperative 4 = Scan protection disable
005	1 = Key learning time in seconds 2 = Target no. of keys 3 = Actual no. of keys 4 = Status of key adaptation

3) Depending on the communication type, this field either contains the “data bus” or the Baud rate in the form of a “number”.

Note

- *The data block always indicates the active status of the immobilizer at the point just after the ignition was switched on.*
- *If an electrical fault occurs which changes this condition after the ignition is switched on, it will not be displayed until the ignition is switched on again and the function “Read data block” is called up.*

Significance of display zones and display possibilities for display group 001:

Display example	Display zone	Possible display
Data bus[4)] 10400[4)]	1 = Data bus (communication type) 1 = Baud rate (communication type: W-wire)	Data transfer type Speed of data transfer
1	2 = Reader coil	0 = faulty 1 = OK
1	3 = Key status	0 = defective 1 = OK
1	4 = Authorised key	0 = no 1 = yes

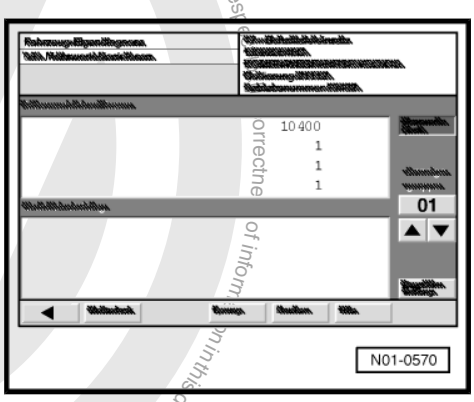

4) Depending on the communication type, this field either contains the “data bus” or the Baud rate in the form of a number (W-wire).

satelettronica

Significance of display zones and display possibilities for display group 002:

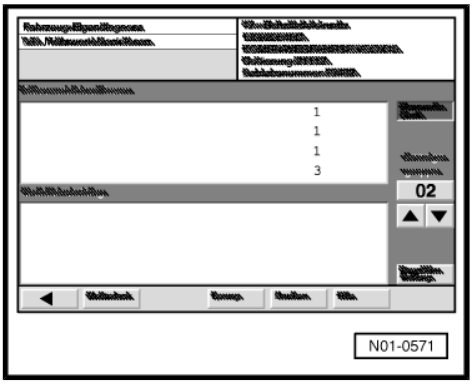

Display example	Display zone	Possible display
1	1 = Start procedure permitted	0 = no 1 = yes
1	2 = Engine control unit responding	0 = no 1 = yes
1	3 = Key status OK	0 = no 1 = yes
3	4 = Number of learned keys	0 = minimum 8 = maximum

Significance of display zones and display possibilities for display group 003:

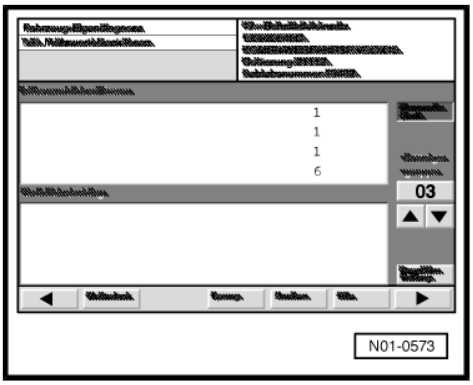

Display example	Display zone	Possible display
1	1 = Change code authorized	0 = no 1 = yes
1	2 = Key status (transponder)	0 = not blocked 1 = blocked
1	3 = Fixed code authorised	0 = no 1 = yes
6	4 = Immobilizer status	4 = Service department new 5 = Service department locked 6 = Immobilizer adapted 7 = Key learning active

Significance of display zones and display possibilities for display group 004:

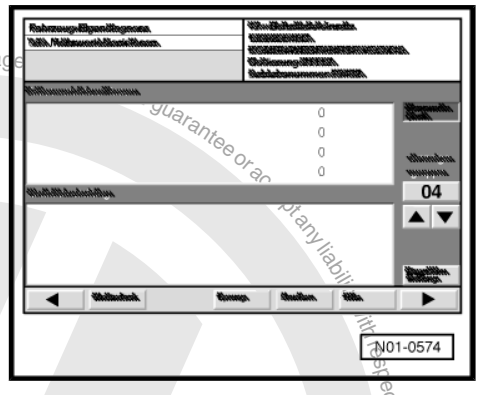

Display example	Display zone	Possible display
0	1 = Login disable (tester)	0...255
0	2 = Login disable (CAN)	0...255
0	3 = inoperative	0
0	4 = Scan protection disable	0...10

Note

The block is activated after 20 attempts at starting the vehicle with an unauthorised key.

Protected by copyright. Copying for private or commercial purposes, in part or in whole, is not permitted unless authorised by Volkswagen AG. Volkswagen AG guarantee or accept any liability with respect to the correctness of information in this document. Copyright by Volkswagen AG.
satelettronica

Significance of display zones and display possibilities for display group 005:

Display example	Display zone	Possible display
0.0 s	1 = Key learning time	Learning time in seconds
3	2 = Set number of keys	0 = minimum 8 = maximum
3	3 = Actual number of keys	0 = minimum 8 = maximum
0000	4 = Status of key adaptation ♦ Fault status ♦ Adaption ♦ Current key ♦ Current adaptation	XXX0 = no fault XXX1 = fault XX0X = finished XX1X = running X0XX = OK. X1XX = not OK 0XXX = finished 1XXX = running

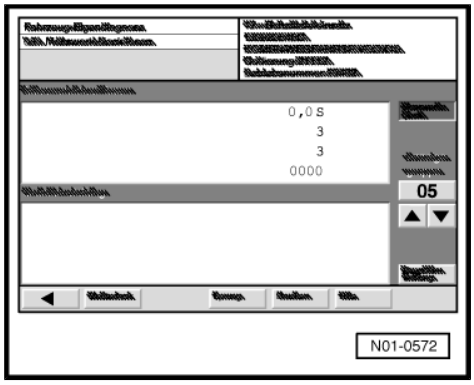

2.4 Coding immobilizer control unit -J362-

– Coding immobilizer control unit -J362- (W-wire) ⇒ page 16 .

– Coding immobilizer control unit -J362- (data bus) ⇒ page 17 .

2.4.1 Coding immobilizer control unit -J362- (W-wire)

Note

♦ *Vehicles from 01.99 ‣ two different versions are installed depending on the type engine. On one version the immobilizer control unit and engine control unit communicate with one another via the data bus, on the other versions this communication is via the W-wire.*

♦ *The corresponding communication method should be determined beforehand using the display group 001 ⇒ page 14 via the "Read data block" function ⇒ page 11 .*

♦ *Procedure for control unit communications via data bus ⇒ page 17 .*

The control units for 2nd and 3rd generation immobilizers (communication via W-wire) are equipped with an automatic recognition for the Baud rate. This means that it is not necessary to code the control units.

The correct data transfer speed between engine control unit or fuel shut-off control unit and immobilizer control unit is automatically stored in the immobilizer control unit after recognition.

Note

♦ *If the immobilizer control unit cannot detect the correct Baud rate, then the coding is set to the value "00000".*

♦ *The fault "Control unit defective" is stored in the fault memory ⇒ page 11 .*

Copyright by Volkswagen AG. Volkswagen AG does not guarantee or accept any liability with respect to the correctness of information in this document. Copying for private or commercial purposes, in part or in whole, is not permitted unless authorised by Volkswagen AG.
satelettronica

2.4.2 Coding immobilizer control unit -J362- (data bus)

Note

- *Vehicles from 01.99 ‣ two different versions are installed depending on the type engine. On one version the immobilizer control unit and engine control unit communicate with one another via the data bus, on the other versions this communication is via the W-wire.*
- *The corresponding communication method should be determined beforehand using the display group 001 ⇒ page 14 via the "Read data block" function ⇒ page 11 .*
- *Procedure for control unit communications via the W-wire ⇒ page 16 .*

– Initiating immobilizer self-diagnosis ⇒ page 5 .

Indicated on display:

– Press "07 - Code control unit" on the display -arrow-.

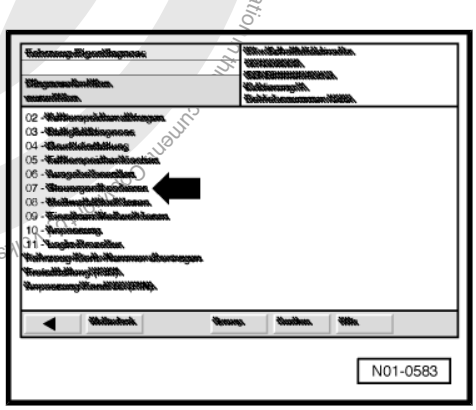

Indicated on display:

The following codes are possible:

- 00001 - for all vehicles

– On the number pad on the display -arrow-, press the keys 0, 0, 0, 0 and 1.

– Confirm entry by pressing "Q" key on number block on display -arrow-.

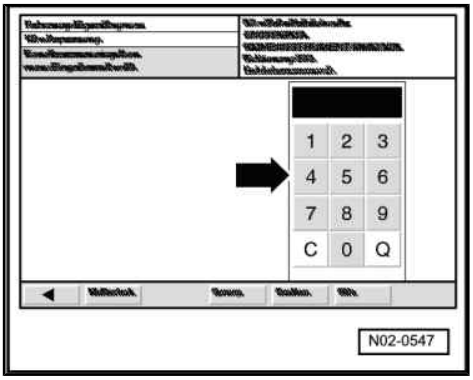

satelettronica

3 Guided functions for immobilizer

Protected by copyright. Copying for private or commercial purposes, in part or in whole, is not permitted unless authorised by Volkswagen AG. Volkswagen AG does not guarantee or accept any liability with respect to the correctness of information in this document. Copyright by Volkswagen AG.

Note

- *In Germany the "online request with GeKo-VW" replaces the request of the 7 character PIN as of 01.07.2004.*
- *In other countries the "online request" replaces the request of the 7 character PIN as of 01.10.2004.*
- *Immobilizer "adaption" is now only possible with vehicle diagnosis, testing and information system -VAS 5051A- or vehicle diagnosis and service information system -VAS 5052- in operating mode "Guided functions".*
- *Observe additional information and prerequisites for "online request with GeKo-VW"* *⇒ page 18* *.*

General description:

Second generation immobilizers are installed on vehicles up to 09.99.

Communications between the immobilizer control unit and the engine control unit take place on the W-wire.

The third generation of immobilizer was introduced from 10.99.

Depending on engine fitted there are two different versions installed.

On one version the immobilizer control unit and engine control unit communicate with one another via the data bus, on the other versions this communication is via the W-wire.

The immobilizer electronics consist of:

- An immobilizer control unit.
- An adapted (matched) engine control unit.
- A reader coil on ignition lock.
- And adapted (matched) ignition keys with electronic components (transponder and response reader memory).

3.1 Observe additional information and perquisites for "online request with GeKo-VW"

Prerequisites:

- At least one vehicle diagnosis, testing and information system -VAS 5051A- or vehicle diagnosis and service information system -VAS 5052- must be "online".
- The user ID and password for GeKo-VW must be entered in the user profile of the dealership system.

Additional information:

The change affects all vehicles with an immobilizer, even older vehicles.

"GeKo-VW" means Secret and Component Protection for Volkswagen Vehicles.

With the introduction of "GeKo-VW" the "PIN" for the immobilizer can only be requested by "online request".

"GeKo-VW" replaces the request for the "7-digit PIN".

satelettronica

With the authorisation of “GeKo-VW” the radio code of a VW radio can be requested via ELSA/FISH.

Note

- *All other information is located in ServiceNet under System/ GeKo-VW - Germany*
- *An “online system test” should be undertaken to check the online connection, the user authorisation and a correct line connection before adapting the immobilizer* ⇒ page 19 .

3.2 Online system test

– Connect either the vehicle diagnosis, testing and information system -VAS 5051A- or the vehicle diagnosis and service information system -VAS 5052- ⇒ page 1 .

– Select operating mode “Guided functions” in vehicle diagnosis, testing and information system -VAS 5051A- or vehicle diagnosis and service information system -VAS 5052- .

– Select following menu points one after the other according to Volkswagen brand CD:

- Car rest vehicles
- All model years
- All versions
- All engine codes
- Press “GoTo” key.
- “Immobilizer I and II” or “Immobilizer III address word 25”
- “Immobilizer I and II functions” or “Immobilizer III functions”
- “Online system test”

The “online system test” is now a part of the test plan and can be initiated by pressing the “GoTo” key.

3.3 Adaptation of ignition keys

Note

Order a new genuine key via lock number ⇒ Parts catalogue (ETKA) if a key is lost.

– Connect either the vehicle diagnosis, testing and information system -VAS 5051A- or the vehicle diagnosis and service information system -VAS 5052- ⇒ page 1 .

– Select operating mode “Guided functions” in vehicle diagnosis, testing and information system -VAS 5051A- or vehicle diagnosis and service information system -VAS 5052- .

– Select following menu points one after the other according to Volkswagen brand CD:

- Car rest vehicles
- All model years
- All versions
- All engine codes
- Press “GoTo” key.

Protected by copyright. Copying for private or commercial purposes, in part or in whole, is not permitted unless authorised by Volkswagen AG. Volkswagen AG does not guarantee or accept any liability with respect to the correctness of information in this document. Copyright by Volkswagen AG.
satelettronica

© Volkswagen AG, does not guarantee or accept any liability with respect to the correctness of information in this document. Copyright by Volkswagen AG. Protected by copyright. Copying for private or commercial purposes, in whole or in part, not permitted unless authorised by Volkswagen AG.

- “Immobilizer I and II” or “Immobilizer III address word 25”
- “Immobilizer I and II functions” or “Immobilizer III functions”
- “Adaptation of ignition keys”

The “adaption of ignition keys” is now a part of the test plan and can be initiated by pressing the “GoTo” key.

3.4 Adaption (matching) after changing engine control unit

– Connect either the vehicle diagnosis, testing and information system -VAS 5051A- or the vehicle diagnosis and service information system -VAS 5052- ⇒ page 1 .

– Select operating mode “Guided functions” in vehicle diagnosis, testing and information system -VAS 5051A- or vehicle diagnosis and service information system -VAS 5052- .

– Select following menu points one after the other according to Volkswagen brand CD:

- Car rest vehicles
- All model years
- All versions
- All engine codes
- Press “GoTo” key.
- “Immobilizer I and II” or “Immobilizer III address word 25”
- “Immobilizer I and II functions” or “Immobilizer III functions”
- “Adaption (matching) after changing engine control unit”

The “adaption after changing engine control unit” is now a part of the test plan and can be initiated by pressing the “GoTo” key.

3.5 Adapting immobilizer

– Connect either the vehicle diagnosis, testing and information system -VAS 5051A- or the vehicle diagnosis and service information system -VAS 5052- ⇒ page 1 .

– Select operating mode “Guided functions” in vehicle diagnosis, testing and information system -VAS 5051A- or vehicle diagnosis and service information system -VAS 5052- .

– Select following menu points one after the other according to Volkswagen brand CD:

- Car rest vehicles
- All model years
- All versions
- All engine codes
- Press “GoTo” key.
- “Immobilizer I and II” or “Immobilizer III address word 25”
- “Immobilizer I and II functions” or “Immobilizer III functions”
- “Adapting immobilizer”

The “immobilizer adaption” is now a part of the test plan and can be initiated by pressing the “GoTo” key.

satelettronica

4 Self-diagnosis of dash panel insert

General description:

Note

- *The dash panel insert must not be dismantled.*
- *If required the dash panel insert is to be exchanged using normal exchange part procedures. Complete damage report form and return together with dash panel insert. Use original packaging only when returning items.*
- *The odometer reading and the service interval display can be adapted to the new dash panel insert* ⇒ page 37 .

The dash panel insert is connected to the powertrain data bus in vehicles from 10.99 ▸.

The data bus is also called the CAN data bus.

Data can be exchanged between the powertrain data bus and the diagnosis wire (K-wire) via the data bus diagnostic interface -J533- in the dash panel insert.

Note

The data bus diagnostic interface -J533- in the new (replacement) dash panel insert must be re-coded in all cases, even if the correct code number has already been saved ⇒ page 50 .

The dash panel insert is controlled via a microprocessor which is equipped with an extensive self-diagnosis functionality.

If faults occur in the sensors and components being monitored, they will be stored in the fault memory together with an indication of the type of fault.

The self-diagnosis must be initiated at the start of fault finding and the stored information read. The fault information displayed is used in conjunction with a fault table which has information on the possible fault causes for pin-pointed repair measures ⇒ page 26 .

4.1 Performing self-diagnosis of dash panel insert

4.1.1 Initiating self-diagnosis of dash panel insert

Note

The following sequence is described for the fault reader -V.A.G 1551- , the sequence described in the chapter for the "vehicle diagnosis, testing and information system may also be used" ⇒ page 1 .

– Connecting fault reader ⇒ page 1 .

– Switch on ignition.

Protected by copyright. Copyright by Volkswagen AG. Volkswagen AG does not guarantee or accept any liability with respect to the correctness of information in this document. Copyright by Volkswagen AG. Unauthorised copying or in whole, is prohibited unless authorised by Volkswagen AG. Only for official use.
satelettronica

Indicated on display:

```
V.A.G - SELF-DIAGNOSIS                HELP
  1 - Rapid data transfer*
```

```
V.A.G - SELF-DIAGNOSIS                HELP
  2 - Flash code output*
```

*) Appears alternately

– Press key 1 for “Rapid data transfer” mode.

Indicated on display:

```
Rapid data transfer                   HELP
Enter address word XX
```

– Press keys 1 and 7. (“17” is used to enter the address word “Dash panel insert”).

Indicated on display:

```
Rapid data transfer                      Q
17 Dash panel insert
```

– Confirm entry with Q key.

Indicated on display:

```
Rapid data transfer                      Q
Tester sends address word 17
```

– Confirm entry with Q key.

Indicated on display:

```
6N0920804J Combi.instrument B00   X65 ->
Coding 00144                WSC     00000
```

– Press ↵ key.

If the following display appears:

```
Control unit not responding!          HELP
```

– Press the HELP key to print out a list of possible fault causes.

– After rectifying faults enter address word 17 for dash panel insert again and confirm with Q.

Indicated on display:

```
6N0920804J Combi.instrument B00   X65 ->
Coding 00144                WSC     00000
```

– Press ↵ key.

Indicated on display:

```
Rapid data transfer                   HELP
Select function XX
```

– After the HELP key is pressed, a list of the possible functions is printed out ⇒ page 22 .

4.1.2 Overview of available functions

Functions	Page
01 - Reading control unit version	⇒ page 23
02 - Reading fault memory	⇒ page 24
03 - Final control diagnosis	⇒ page 29
05 - Erasing fault memory	⇒ page 24
06 - Ending output	⇒ page 25
07 - Code control unit	⇒ page 31
08 - Read data block	⇒ page 33
10 - Adaption	⇒ page 37

Protected by copyright. Copying for private or commercial purposes, in part or in whole, is not permitted unless authorised by Volkswagen AG. Volkswagen AG does not guarantee or accept any liability with respect to the correctness of information in this document. Copyright by Volkswagen AG.

satelettronica

Note

- *Do not select further functions which can be printed out after pressing the HELP key.*
- *After the function is finished the fault reader -V.A.G 1551- returns to the following starting position:*

Indicated on display:

```
Rapid data transfer                    HELP
Select function XX
```

4.1.3 Reading control unit version

Note

The following sequence is described for the fault reader -V.A.G 1551- , the sequence described in the chapter for the "vehicle diagnosis, testing and information system may also be used" ⇒ page 1 .

– Connecting fault reader ⇒ page 1 .

– Switch on ignition.

Indicated on display:

```
V.A.G - SELF-DIAGNOSIS                 HELP
  1 - Rapid data transfer*
```

```
V.A.G - SELF-DIAGNOSIS                 HELP
  2 - Flash code output*
```

*) Appears alternately

– Press key 1 for "Rapid data transfer" mode.

Indicated on display:

```
Rapid data transfer                    HELP
Enter address word XX
```

– Press keys 1 and 7. ("17" is used to enter the address word "Dash panel insert").

Indicated on display:

```
Rapid data transfer                       Q
17 Dash panel insert
```

– Confirm entry with Q key.

Indicated on display:

```
Rapid data transfer                       Q
Tester sends address word 17
```

Indicated on display:

```
6N0920804J Combi.instrument B00   X65 ->
Coding 00144                WSC    00000
```

- Top line: part number of control unit, system designation (combi-instrument), manufactures code version number
- Bottom line: Code number [5], dealership number [6]

5) Depending on engine, gearbox, optional equipment and country version

6) Will be automatically stored in the control unit when entering the system.

– Press ↵ key.

Indicated on display:

```
Rapid data transfer                    HELP
Select function XX
```

– End output (function 06) ⇒ page 25 .

Protected by copyright. Copyright by Volkswagen AG. Volkswagen AG does not guarantee or assume any liability with respect to the correctness of information in this document. Copyright by Volkswagen AG. Reproduction is not permitted unless authorised by Volkswagen AG. Volkswagen AG does not guarantee or assume any liability with respect to the correctness of information in this document. Copyright by Volkswagen AG. Reproduction is not permitted unless authorised by Volkswagen AG. Volkswagen AG does not guarantee or assume any liability with respect to the correctness of information in this document. Copyright by Volkswagen AG. Reproduction is not permitted unless authorised by Volkswagen AG. Volkswagen AG does not guarantee or assume any liability with respect to the correctness of information in this document. Copyright by Volkswagen AG. Reproduction is not permitted unless authorised by Volkswagen AG. Volkswagen AG does not guarantee or assume any liability with respect to the correctness of information in this document. Copyright by Volkswagen AG.

satelettronica

4.1.4 Reading fault memory

Note

The following sequence is described for the fault reader - V.A.G 1551- , the sequence described in the chapter for the "vehicle diagnosis, testing and information system may also be used" ⇒ page 1 .

– Initiate self-diagnosis of dash panel insert ⇒ page 21 .

Note

The displayed fault information is only updated when the self-diagnosis is started or the function 05 "Erase fault memory" is selected. The information is not continuously updated.

– Switch on the printer with the PRINT key (indicator lamp in key lights up).

Indicated on display:

```
Rapid data transfer                    HELP
Select function XX
```

– Press keys 0 and 2. (02 selects the function "Read fault memory").

Indicated on display:

```
Rapid data transfer                       Q
02 - Read fault memory
```

– Confirm entry with Q key.

The number of stored faults appears in the display.

```
X faults recognized!
```

The stored faults are displayed and printed out one after another.

– Check print out against fault table and rectify all faults as necessary ⇒ page 26 .

Note

If "No fault recognised" is displayed the programme will return to the start point after pressing → key.

```
No fault recognized!                  ->
```

Indicated on display:

```
Rapid data transfer                    HELP
Select function XX
```

If something else is displayed: ⇒ Fault reader operating instructions .

– End output (function 06) ⇒ page 25 .

4.1.5 Erasing fault memory

Note

The following sequence is described for the fault reader - V.A.G 1551- , the sequence described in the chapter for the "vehicle diagnosis, testing and information system may also be used" ⇒ page 1 .

– Initiate self-diagnosis of dash panel insert ⇒ page 21 .

Protected by copyright. Copying for private or commercial purposes, in part or in whole, is not permitted unless authorised by Volkswagen AG. Volkswagen AG does not guarantee or accept any liability with respect to the correctness of information in this document. Copyright by Volkswagen AG.
satelettronica

Note

After erasing the fault memory its contents will be automatically displayed. If the fault memory cannot be erased, read the fault memory again and repair any faults found.

Prerequisites:

- Fault memory read ⇒ page 24 .
- All faults repaired.

After fault memory has been successfully read:

Indicated on display:

```
Rapid data transfer                    HELP
Select function XX
```

– Press keys 0 and 5. (05 selects the function “Erase fault memory”).

Indicated on display:

```
Rapid data transfer                       Q
05 Erase fault memory
```

– Confirm entry with Q key.

Indicated on display:

```
Rapid data transfer                      ->
Fault memory is erased!
```

The fault memory is now erased.

– Press ↵ key.

Indicated on display:

```
Rapid data transfer                    HELP
Select function XX
```

– End output (function 06) ⇒ page 25 .

Note

If the following appears in the display, the test sequence is faulty.

```
Warning!
Fault memory was not read
```

If the following appears in the display, the test sequence is faulty.

```
Rapid data transfer                      ->
Fault memory was not read
```

Adhere exactly to test sequence: first read fault memory, if necessary repair faults, then erase.

4.1.6 Ending output

Indicated on display:

```
Rapid data transfer                    HELP
Select function XX
```

– Press keys 0 and 6. (06 selects the function “End output”).

Indicated on display:

```
Rapid data transfer                       Q
06 End output
```

– Confirm entry with Q key.

Indicated on display:

```
Rapid data transfer                    Help
Enter address word XX
```

– Switch off ignition.

– Disconnect fault reader -V.A.G 1551- .

Protected by copyright. Copying for private or commercial purposes, in part or in whole, is not permitted unless authorised by Volkswagen AG. Volkswagen AG does not guarantee or accept any liability with respect to the correctness of information in this document. Copyright by Volkswagen AG.
satelettronica

4.2 Fault table

Note

- *The following table lists all the faults that can be recognised by the dash panel insert control unit -J285- . The faults are listed in order according to their 5-figure code numbers.*
- *Before renewing components, check the wiring and connections to these components as well as the earth connections, referring to the current flow diagram.*
- *When repair has been carried out, the fault memory must always be read again and erased.*

Indicated on display	Possible fault cause	Possible effects	Fault elimination
No fault recognized!	The self-diagnosis is finished If “No fault recognized” appears after completing repairs.		
00667[7)] Ambient temperature signal. Open circuit/short to positive. Short to earth.	Open/short circuit. Ambient temperature sensor -G17- defective.	Dashes (- - -) are displayed in dash panel insert.	– Read data block ⇒ page 33 . – Fault finding referring to current flow diagram. – Renew ambient temperature sensor -G17- .
00771[8)] Sender for fuel gauge -G- Open circuit/short to positive. Short to earth.	Open circuit or short circuit between fuel gauge sender -G- and dash panel insert. Fuel gauge sender -G- defective.	Fuel reserve display value 0 (“empty”).	– Read data block ⇒ page 33 . – Fault finding referring to current flow diagram. – Renew fuel gauge sender -G- .
00778 Steering angle sensor -G85- No communications.	Data received from steering angle sender -G85- via powertrain data bus not OK.	Function of systems connected to powertrain data bus not OK.	– Check coding of data bus diagnostic interface -J533- ⇒ page 50 . – Read out fault memory of ABS control unit and rectify any faults. – Check data bus to steering angle sender -G85- referring to current flow diagram.
00779[10)] Ambient temperature sensor -G17- Open circuit/short to positive.	Open/short circuit.	Dashes (- - -) are displayed in dash panel insert.	– Read data block ⇒ page 33 .

Copyright by Volkswagen AG. Volkswagen AG does not guarantee or accept any liability with respect to the correctness of information in this document. Copyright by Volkswagen AG. Protected by copyright. Copying for private or commercial purposes, in part or in whole, is not permitted unless authorised by Volkswagen AG.
satelettronica

Indicated on display	Possible fault cause	Possible effects	Fault elimination
Short to earth.	Ambient temperature sensor -G17- defective.		– Fault finding referring to current flow diagram. – Renew ambient temperature sensor -G17- .
01039[9)] Coolant temperature display sender -G2- Open circuit/short to positive. Short to earth.	Open circuit or short circuit between coolant temperature display sender -G2- and dash panel insert. Coolant temperature display sender -G2- defective.	Coolant temperature gauge needle is on left stop.	– Read data block ⇒ page 33 . – Fault finding referring to current flow diagram. – Renew coolant temperature display sender -G2- .
01044 Control unit incorrectly coded.	A control unit connected to the powertrain data bus is incorrectly coded. A control unit connected to the powertrain data bus is defective.	Poor driving characteristics (gear change jolt, load change jolt). No vehicle dynamics program.	– Read data block ⇒ page 33 . – Read fault memories of all control units connected to powertrain data bus and rectify any faults. – Check and if necessary correct control unit coding. – If necessary renew control unit.
01086 Speedometer sender -G22- Signal too high.	Speedometer sender -G22- defective.	Incorrect speed displayed.	– Renew speedometer sender -G22- .
01312 Powertrain data bus. Defective.	Fault in data wiring. Powertrain data bus in Bus off mode.	Poor driving characteristics (gear change jolt, load change jolt). No vehicle dynamics program.	– Read data block ⇒ page 33 . – Check control unit coding. – Read fault memories of all control units connected to powertrain data bus and rectify any faults. – Check wiring for data bus referring to current flow diagram.
01314 Engine control unit.			

Protected by copyright. Copying for private or commercial purposes, in part or in whole, is not permitted unless authorised by Volkswagen AG. Volkswagen AG does not guarantee or accept any liability with respect to the correctness of information in this document. Copyright by Volkswagen AG.
satelettronica

Indicated on display	Possible fault cause	Possible effects	Fault elimination
No communications.	Data received from engine control unit via powertrain data bus not OK.	Poor driving characteristics (gear change jolt, load change jolt). No vehicle dynamics program.	– Read data block ⇒ page 33 . – Read fault memory of engine control unit and rectify any faults. – Check data bus to engine control unit referring to current flow diagram.
01315 Gearbox control unit. No communications.	Data received from gearbox control unit via powertrain data bus not OK.	Poor driving characteristics (gear change jolt, load change jolt). No vehicle dynamics program.	– Read data block ⇒ page 33 . – Read fault memory of gearbox control unit and rectify any faults. – Check data bus to gearbox control unit referring to current flow diagram.
01316 Brake control unit. No communications.	Data received from ABS control unit via powertrain data bus not OK.	Poor driving characteristics (gear change jolt, load change jolt). No vehicle dynamics program.	– Read data block ⇒ page 33 . – Read out fault memory of ABS control unit and rectify any faults. – Check data bus to ABS control unit referring to current flow diagram.
01320 Climatronic control unit -J255- No communications.	Data received from Climatronic control unit -J255- via powertrain data bus not OK.	Function of systems connected to powertrain data bus not OK.	– Read data block ⇒ page 33 . – Check data bus to Climatronic control unit referring to current flow diagram.
01321 Airbag control unit -J234- No communications.	Data received from Climatronic control unit -J234- via powertrain data bus not OK.	Warning lamp for airbag is lit.	– Read data block ⇒ page 33 . – Read out fault memory of airbag control unit and rectify any faults. – Check data bus to airbag control unit referring to current flow diagram.
65535 Control unit.			

Protected by copyright. Copying for private or commercial purposes, in part or in whole, is not permitted unless authorised by Volkswagen AG. Volkswagen AG does not guarantee or accept any liability with respect to the correctness of information in this document. Copyright by Volkswagen AG.

satelettronica

Indicated on display	Possible fault cause	Possible effects	Fault elimination
Defective.	Dash panel insert control unit -J285- defective.	No or faulty indication from instruments, displays and warning lamps.	– Renew dash panel insert.

7) Vehicles with Climatronic only: A fault entry is only stored when the fault has been registered continuously for at least 60 seconds.

8) A fault entry is only stored when the fault has been registered continuously for at least 20 seconds. During the first 20 seconds the text "Sender cannot currently be tested" will be displayed.

9) A fault entry “Open circuit/short to positive” is only registered once the engine has been running for 30 minutes and the fault is recognised.

10) Only vehicles with ambient temperature sender: a fault entry is only stored when the fault has been registered continuously for at least 60 seconds.

4.3 Final control diagnosis

The final control diagnosis is part of the electrical check. The following components can be checked via the final control diagnosis depending on equipment variants:

- Rev counter
- Fuel gauge
- Coolant temperature gauge
- Speedometer
- Displays (odometer, digital clock)
- Reserve fuel warning lamp -K105-
- Oil pressure warning lamp -K3-
- Coolant temperature/coolant shortage indicator warning lamp.
- Seat belt warning lamp, if fitted.
- Twin circuit brakes and handbrake system warning lamp -K7-
- Gong
- Oil pressure warning buzzer.

– If the self-diagnosis detects a fault, install a new dash panel insert.

Note

- *The following sequence is described for the fault reader -V.A.G.1551- , the sequence described in the chapter for the “vehicle diagnosis, testing and information system may also be used”* *⇒ page 1* *.*
- *If the engine is running or the vehicle is moving the dash panel insert final control diagnosis cannot be initiated/will be interrupted.*
- *The C key can be used to exit the test sequence at any time.*

– Initiate self-diagnosis of dash panel insert ⇒ page 21 .

Indicated on display:

```
Rapid data transfer                HELP
Select function XX
```

– Press keys 0 and 3. (03 selects the function “Final control diagnosis”).

Indicated on display:

```
Rapid data transfer                 Q
03 - Final control diagnosis
```

Protected by copyright. Copyright by Volkswagen AG. Volkswagen AG does not guarantee or accept any liability with respect to the correctness of information in this document. Copyright by Volkswagen AG. Commercial purposes or in whole is not permitted unless authorised by Volkswagen AG.
satelettronica

– Confirm entry with Q key.

Indicated on display:

```
Final control diagnosis              ->
Rev counter
```

The rev-counter needle moves forwards and backwards through the measuring range and then position itself at 3000.

– Press → key.

Indicated on display:

```
Final control diagnosis              ->
Fuel gauge
```

The fuel gauge needle moves forwards and backwards through measuring range and then positions itself at 1/2.

– Press → key.

Indicated on display:

```
Final control diagnosis              ->
Temperature gauge
```

The coolant temperature gauge needle moves forwards and backwards through measuring range and then positions itself at 90.

– Press → key.

Indicated on display:

```
Final control diagnosis              ->
Speedometer
```

The speedometer needle moves forwards and backwards through the measuring range and then positions itself at 100.

– Press → key.

Indicated on display:

```
Final control diagnosis              ->
Segment test
```

All LCD segments in speedometer display and in rev counter are activated and become visible.

– Press → key.

Indicated on display:

```
Final control diagnosis              ->
Fuel reserve warning lamp K105
```

The fuel reserve warning lamp -K105- lights up.

– Press → key.

Indicated on display:

```
Final control diagnosis              ->
Oil pressure warning lamp K3
```

The oil pressure warning lamp -K3- lights up.

– Press → key.

Indicated on display:

```
Final control diagnosis              ->
Hot lamp
```

The coolant temperature/coolant shortage display warning lamp lights up.

– Press → key.

Indicated on display:

```
Final control diagnosis              ->
Brake system warning lamp K7
```

The dual circuit brake/handbrake warning lamp -K7- lights up.

– Press → key.

Indicated on display:

```
Final control diagnosis              ->
Gong
```

Protected by copyright. Copying for private or commercial purposes, in part or in whole, is not permitted unless authorised by Volkswagen AG. Volkswagen AG does not guarantee or accept any liability with respect to the correctness of information in this document. Copyright by Volkswagen AG.

satelettronica

Protected by copyright. Copying for private or commercial purposes, in part or in whole, is not permitted unless authorised by Volkswagen AG. Volkswagen AG does not guarantee or accept any liability with respect to the correctness of information in this document. Copyright by Volkswagen AG.

The gong (chime) will be activated and will sound continuously.

– Press ⏎ key.

Indicated on display:

```
Final control diagnosis                    ->
Buzzer/gong H3
```

The buzzer is activated. A warning signal can be heard (buzzer and gong -H3-).

– Press ⏎ key.

Indicated on display:

```
Final control diagnosis                    ->
END
```

After “END” appears in display, the actual values are displayed again.

– Press ⏎ key.

Indicated on display:

```
Rapid data transfer                      HELP
Select function XX
```

– End output (function 06) ⇒ page 25 .

4.4 Code control unit

Using this function the dash panel insert can be coded as follows:

- Optional equipment
- National codes
- Number of cylinders
- Code for distance impulse number

Note

- *The following sequence is described for the fault reader - V.A.G 1551- , the sequence described in the chapter for the “vehicle diagnosis, testing and information system may also be used”* *⇒ page 1* *.*
- *The coding sets the various combination possibilities according to country variants, number of cylinders and engine type.*
- *The coding table shows only the various combination possibilities that apply to the VW Polo.*

– Initiate self-diagnosis of dash panel insert ⇒ page 21 .

Indicated on display:

```
Rapid data transfer                      HELP
Select function XX
```

– Press keys 0 and 7. (07 selects the function “Code control unit”).

– Confirm entry with Q key.

Indicated on display:

```
Code control unit
Enter code number XXXXX          (0-32000)
```

– Enter code number taken from code table ⇒ page 32 .

Example:

position				Code
02				Code for the optional equipment (seat belt warning)
	1			National codes (EU)
		4		Code for No. of cylinders (4 cylinder)

satelettronica

			1	Code for distance impulse number (1)

– Press keys 0, 2, 1, 4 and 1 .

Indicated on display:

```
Coding control unit                    Q
Enter code number 02141        (0-32000)
```

– Confirm entry with Q key.

Indicated on display:

```
6N0920804J Combi.instrument B00   X65 ->
Coding 02141                WSC    00000
```

– Press → key.

Indicated on display:

```
Rapid data transfer                  HELP
Select function XX
```

– End output (function 06) ⇒ page 25 .

4.4.1 Code table

Code				Settings
1. +2.	3	4	5	position
				Code for the optional equipment [11]
00				No optional equipment active
01				Brake pad wear indicator active
02				Seat belt warning active
04				Washer fluid warning active
				National codes
	1			Europe (EU)
	2			USA (US)
	3			Canada (CDN)
	4			United Kingdom (GB)
	5			Japan (JP)
	6			Saudi Arabia (SA)
	7			Australia (AUS)
				Code for No. of cylinders
		1		Vehicles with no CAN connection
		4		4-cylinder
				Code for distance impulse number (K-number) [12]
			1	3775
			2	4492
			3	3875
			4	3833
			5	4165

11) If more than one item of optional equipment needs to be entered then the code numbers should be added together.

12) The code number for the distance impulse number is dependent on vehicle engine/gearbox combination.

Example:

Brake pad wear indicator and washer fluid warning:

01 + 04 = 05

Protected by copyright. Copying for private or commercial purposes, in part or in whole, is not permitted unless authorised by Volkswagen AG. Volkswagen AG does not guarantee or accept any liability with respect to the correctness of information in this document. Copyright by Volkswagen AG.

satelettronica

Engine/gearbox combinations:	Code no.:
1.0 l / 55 kW - 4-cylinder (16V), 1.4 l / 44 kW - 4-cylinder, 1.4 l / 55 kW - 4-cylinder (16V), 1.6 l / 55 kW - 4-cylinder	1
1.4 l / 74 kW - 4-cylinder, 1.6 l / 74 kW - 4-cylinder	2
1.6 l / 66 kW - 4-cylinder, 1.8 l / 71 kW - 4-cylinder, 1.8 l / 82 kW - 4-cylinder, 1.9 l / 50 kW - 4-cylinder	3
1.9 l / 47 kW - 4-cylinder, 1.9 l / 66 kW - 4-cylinder, 1.9 l / 81 kW - 4-cylinder, all vehicles with automatic gearbox	4
all other engine/gearbox combinations	5

Note

The distance impulse number is a constant used to calculate the speed and distance travelled.

4.5 Read data block

Note

- *The following sequence is described for the fault reader - V.A.G 1551- , the sequence described in the chapter for the "vehicle diagnosis, testing and information system may also be used"* *⇒ page 1* .
- *Overview of selectable display groups* *⇒ page 34* .

– Initiate self-diagnosis of dash panel insert ⇒ page 21 .

Indicated on display:

```
Rapid data transfer                    HELP
Select function XX
```

– Press keys 0 and 8 (08 initiates the function "Read data value block").

Indicated on display:

```
Rapid data transfer                       Q
08 - Read data block
```

– Confirm entry with Q key.

Indicated on display:

```
Read data block
Enter display group number XXX
```

Example for read data block 2:

Overview of selectable display groups ⇒ page 34 .

– Press keys 0, 0 and 2.

– Indicated on display:

```
Reading data block 2                     ->
  820 km          8 l            113 &Omeg
```

satelettronica

Note

- *The display always shows the actual sender and sensor values. The values on the dash panel insert are filtered and therefore they can vary!*
- *To change to another display group proceed as follows:*

Display group	Fault reader - V.A.G 1551-	Fault reader - V.A.G 1552-
Higher	Press key 3	Press → key
Lower	Press key 1	Press → key
Skip	Press C key.	Press C key.

– Press C key to exit the current display group.

Indicated on display:

```
Read data block                    Help
Enter display group number XXX
```

– Now the desired display group number can be entered or press C key again to exit the function “Read data block”.

Indicated on display (after pressing C key again).

```
Rapid data transfer                Help
Enter address word XX
```

– End output (function 06) ⇒ page 25

4.5.1 Overview of selectable display group numbers

Display group	Display zone in display	Evaluation
001	1 = Speed in km/h 2 = Engine speed in rpm 3 = Oil pressure switch 2 <min 4 = Time	⇒ page 35
002	1 = Distance travelled counter in km 2 = Fuel gauge in l 3 = Ω value of fuel gauge sender -G- 4 = Ambient temperature sender in °C	⇒ page 35
003	1 = Coolant temperature in °C 2 = Vacant 3 = Vacant 4 = Vacant	⇒ page 35
050	1 = Odometer in km 2 = Engine speed in rpm 3 = Vacant 4 = Coolant temperature in °C	⇒ page 36
125[13)]	1 = Engine 2 = Automatic gearbox control unit 3 = ABS control unit 4 = Vacant	⇒ page 36
126[13)]	1 = Vacant 2 = Airbag control unit 3 = Vacant 4 = Vacant	⇒ page 36

13) The status of the data bus function of the control units connected to the powertrain data bus is displayed in the display groups 125 to 126. The display zones for absent control units remain empty.

Protected by copyright. Copying for private or commercial purposes, in part or in whole, is not permitted unless authorised by Volkswagen AG. Volkswagen AG does not guarantee or accept any liability with respect to the correctness of information in this document. Copyright by Volkswagen AG.
satelettronica

4.5.2 Evaluating display group number 001

Display zone	Designation	Display contents	Fault elimination
1	Vehicle speed signal	Vehicle speed in km/h	– Visual check of wiring. – Check electrical connections of relevant circuit to ensure they are securely and correctly connected, and monitor display at the same time. – If the display contents do not change upon operation, rectify the fault or renew the relevant component. – Erase the fault memory. – Perform a function test. – Read the fault memory again.
2	Engine speed	Engine speed in rpm	
3	Oil pressure switch 0.9 bar	Oil P2<min. Oil P2 OK	
4	Time	Time in hours and minutes	

4.5.3 Evaluating display group number 002

Display zone	Designation	Display contents	Fault elimination
1	Distance travelled	Distance travelled in km	– Visual check of wiring. – Check electrical connections of relevant circuit to ensure they are securely and correctly connected, and monitor display at the same time. – If the display contents do not change upon operation, rectify the fault or renew the relevant component. – Perform a function test. – Read the fault memory again.
2	Fuel level [14]	Fuel level in l	
3	Ω value from fuel gauge sender -G- [15]	Resistance in Ω	
4	Ambient temperature	Ambient temperature in °C	

14) 0 l is indicated in zone 2 when fuel gauge sender -G- has an open/short circuit. If less than 7 litres of fuel are in the tank, “7 l” is always displayed; If more than 45 litres are in the tank, “45 l” is always displayed.

15) In display zone 3: 510 Ω is displayed for an open circuit and 0 Ω is displayed for a short circuit.

4.5.4 Evaluating display group number 003

Display zone	Designation	Display contents	Fault elimination
1	Coolant temperature [16]	Coolant temperature in °C	– Visual check of wiring. – Check electrical connections of relevant circuit to ensure they are securely and correctly connected, and monitor display at the same time. – If the display contents do not change upon operation, rectify the fault or renew the relevant component. – Perform a function test. – Read the fault memory again.

Protected by copyright. Copyright by Volkswagen AG. Volkswagen AG does not guarantee or accept any liability with respect to the correctness of information in this document. Copying for private or commercial purposes, in part or in whole, is not permitted unless authorised by Volkswagen AG.
satelettronica

16) If the actual coolant temperature is at a temperature of between approx. 75 °C and 107 °C then this will always be shown on the dash panel insert as 90 °C!

4.5.5 Evaluating display group number 050

Display zone	Designation	Display contents	Fault elimination
1	Distance travelled	Distance travelled in km	– Visual check of wiring. – Check electrical connections of relevant circuit to ensure they are securely and correctly connected, and monitor display at the same time. – If the display contents do not change upon operation, rectify the fault or renew the relevant component. – Erase the fault memory. – Perform a function test. – Read the fault memory again.
2	Engine speed	Engine speed in rpm	
4	Coolant temperature	Coolant temperature in °C	

4.5.6 Evaluating display group number 125

Display zone	Designation	Display contents	Fault elimination
1	Engine control unit.	Engine 1 = OK, data reception from engine control unit via powertrain data bus OK. Engine 0 = not OK, data reception from engine control unit via powertrain data bus not OK.	If data reception is not OK: – Check data bus to control unit referring to current flow diagram.
2	Automatic gearbox control unit	Gbx. 1 = OK, data reception from automatic gearbox control unit via powertrain data bus OK. Gbx. 0 = not OK, data reception from automatic gearbox control unit via powertrain data bus not OK.	
3	ABS control unit	ABS 1 = OK, data reception from ABS control unit via powertrain data bus OK ABS 0 = not OK, no data reception from ABS control unit via powertrain data bus.	

4.5.7 Evaluating display group number 126

Display zone	Designation	Display contents	Fault elimination
2	Airbag control unit	Airbag 1 = OK, data reception from airbag control unit via powertrain data bus OK Airbag 0 = not OK, no data reception from airbag control unit via powertrain data bus.	If data reception is not OK: – Check data bus to control unit referring to current flow diagram.

satelettronica

4.6 Adaption

Using the Adaptation function the following changes can be made and stored:

- Adaptation of the fuel gauge
- Resetting the service interval display (SID)
- Adaptation of the service interval display (SID)
- Adaptation of the distance recorder when renewing the dash panel insert
- Correcting the consumption indicator

The individual functions are called up using the relevant adaptation channel number (see adaptation table).

Adaptation table:

Adaptation channel	Adaptation functions
09	Adapting distance recorder ⇒ page 38 .
10	Service interval data for oil changes service (Service OIL) - counter for distance recorder ⇒ page 39
	Service interval data for oil changes service (Service OIL) - resetting counter for distance recorder ⇒ page 42 .
11	Service interval data for inspection (Service INSP) - counter distance recorder in km ⇒ page 39
	Service interval data for inspection (Service INSP) - resetting counter for distance recorder ⇒ page 42 .
12	Service interval data for (Service INSP) - counter for time in days ⇒ page 39
	Service interval data for (Service INSP) - resetting time counter in days ⇒ page 42 .
30	Adapting (matching) fuel gauge ⇒ page 43 .

Protected by copyright. Copying for private or commercial purposes, in part or in whole, is not permitted unless authorised by Volkswagen AG. Volkswagen AG does not guarantee or accept any liability with respect to the correctness of information in this document. Copyright by Volkswagen AG.
satelettronica

4.6.1 Adapting distance travelled display

Note

- *The following sequence is described for the fault reader -V.A.G 1551- , the sequence described in the chapter for the "vehicle diagnosis, testing and information system may also be used"* ⇒ page 1 *.*
- *The total distance travelled by the vehicle can be read off the defective dash panel insert or determined using the service schedule.*
- *The total distance travelled displayed on the new dash panel insert must not be more than 100 km before the adaptation.*
- *The total distance travelled to be transferred to the new dash panel insert must exceed 100 km.*
- *Adaptation of the total distance travelled is only possible once and then only in a positive direction.*
- *The adaptation can be interrupted with the* [C] *key of the fault reader -V.A.G 1551- .*
- *It is not possible to correct an incorrect entry once it has been confirmed. In this case the dash panel insert would need to be exchanged for a new one.*
- *The adaption must take place in kilometres for countries with a display in miles. Therefore convert adaption value from miles to kilometres.*

Example:

The defective dash panel insert has an odometer display of 89627 km. This kilometre reading can be transferred to the new dash panel insert as follows:

– Initiate self-diagnosis of dash panel insert ⇒ page 21 .

Indicated on display:

```
Rapid data transfer                    HELP
Select function XX
```

– Press keys [1] and [0]. (10 selects the function "Adaption").

Indicated on display:

```
Rapid data transfer                       Q
10 - Adaption
```

– Confirm entry with [Q] key.

Indicated on display:

```
Adaption
Enter channel number XX
```

– Press keys [0] and [9].

– Confirm entry with [Q] key.

Indicated on display:

```
Channel 9      Adaption       0    ->
km - in steps of 10 km          <-1  3->
```

– Move programme on with [→] key.

Indicated on display:

```
Channel 9      Adaption             0
Enter adaption value XXXXX
```

The last digit of the kilometre reading must be rounded up to the nearest 10 km.

A kilometre reading of 89627 produces an adaption value of: "0", "8", "9", "6" and "3"

Protected by copyright. Copying for private or commercial purposes, in part or in whole, is not permitted unless authorised by Volkswagen AG. Volkswagen AG does not guarantee or accept any liability with respect to the correctness of information in this document. Copyright by Volkswagen AG.
satelettronica

X					Hundreds of thousands: 100000 ... 900,000 km
	X				Tens of thousands: 10000 ... 90,000 km
		X			Thousands: 1000 ... 9,000 km
			X		Hundreds: 100 ... 900 km
				X	Tens: 10 ... 90 km
					Ones: round up to next ten

– Enter adaption value using keyboard.

Indicated on display:

```
Channel 9        Adaption          0 Q
Enter adaption value                08963
```

– Confirm entry with Q key.

Indicated on display:

```
Channel 9      Adaption        8963    ->
km - in steps of 10 km           <-1  3->
```

– Press → key.

The entered kilometre reading now appears in the display of the dash panel insert. If the displayed kilometre reading is not OK, e.g. because it was entered incorrectly:

– Press C key and enter correct adaption value again.

If the displayed kilometre reading in dash panel insert is OK:

Indicated on display:

```
Channel 9        Adaption          8963 Q
Save changed value?
```

– Confirm entry with Q key.

Indicated on display:

```
Channel 9      Adaption        8963    ->
Changed value has been saved
```

– End adaption of the distance travelled with the → key.

Indicated on display:

```
Rapid data transfer                  HELP
Select function XX
```

– End output (function 06) ⇒ page 25 .

4.6.2 Adaptation of service interval data when renewing the dash panel insert

When renewing the dash panel insert, the current service interval data readings for

- Oil service (Service OIL), distance travelled in km.
- Inspection service (Service INSP), distance travelled in km.
- Inspection service (Service INSP), time in days.

Must be transferred to the vehicle's new dash panel insert.

Copyright by Volkswagen AG. Volkswagen AG does not guarantee or accept any liability with respect to the correctness of information in this document. Copyright by Volkswagen AG. Reproduction, in part or in whole, is not permitted unless authorised by Volkswagen AG. Volkswagen AG does not guarantee or accept any liability with respect to the correctness of information in this document. Copyright by Volkswagen AG.
satelettronica

Note

- *The data must be read out before removing the defective dash panel insert.*
- *If the data cannot be read (defective dash panel insert) the data from the servicing schedule for the vehicle and the odometer reading must be entered.*
- *The following sequence is described for the fault reader - V.A.G 1551- , the sequence described in the chapter for the "vehicle diagnosis, testing and information system may also be used"* ⇒ page 1 .

– Initiate self-diagnosis of dash panel insert ⇒ page 21 .

Indicated on display:

```
Rapid data transfer                    HELP
Select function XX
```

– Press keys 1 and 0. (10 selects the function "Adaption").

Indicated on display:

```
Rapid data transfer                     Q
10 - Adaption
```

– Confirm entry with Q key.

Indicated on display:

```
Adaption
Enter channel number XX
```

– Select adaptation channels individually according to table:

Adaptation table:

Adaptation channel	Service event
10	Service OEL (or OIL)
11	Service INSP
12	Service INSP

Note

An incorrect entry can be corrected after pressing C key.

– Confirm entry with Q key.

Indicated on new dash panel insert display after entering channel number 10:

```
Channel 10      Adaption       150    ->
Act.val.oil in 100 km            <-1 3->
```

The selected channel and actual counter reading for the service type are displayed in the top line.

The service event specification establishes the value from which the distance recorder and the time counter for the service interval display count back ⇒ Maintenance ; Booklet 29 .

The adaption values for adaption channels 10 to 12 calculate the difference from the relevant specification and the actual vehicle operation (time, total distance travelled).

– Press → key.

Indicated on display:

```
Channel 10      Adaption       150    ->
Enter adaption value XXXXX
```

Received by copyright. Copyright by Volkswagen AG. Volkswagen AG. Volkswagen AG does not guarantee or accept any liability with respect to the correctness of information in this document. Copyright by Volkswagen AG. Copying for private or commercial purposes, in part or in whole, is not permitted unless authorised by Volkswagen AG.
satelettronica

Note

The adaption value must be entered as a 5-digit number (e.g. 00090 for adaption value 90 - this equates to a distance of 9000 km to the next service).

– Enter new adaptation value.

Example:

An overall covered distance of 6000 km was determined for the vehicle from the defective dash panel insert (or the servicing schedule). The customer has covered this distance within a period of 160 days.

All of the service types need to be adapted on the new dash panel insert, so this gives the following adaptation values:

Channel 10: 15,000 km - 6000 km = 9,000 km (adaptation value 90)

Channel 11: 30000 km - 6000 km = 24000 km (adaptation value 240)

Channel 12: 360 days -160 days = 200 days (adaptation value 200)

Note

The time counter for Service INSP can be adapted to max. 360 days.

Indicated on the display after entering adaptation value 90:

```
Channel 10          Adaption          90 Q
Act.val.oil in 100 km               <-1 3->
```

– Confirm entry with Q key.

Indicated on display:

```
Channel 10          Adaption          90 Q
Save changed value?
```

– Confirm entry with Q key.

Indicated on display:

```
Channel 10          Adaption          90 Q
Changed value has been saved
```

– Press → key.

Indicated on display:

```
Rapid data transfer                   HELP
Select function XX
```

– After performing the adaptation of channel 10, press keys 1 and 0 again. (10 selects the function “Adaption”).

Indicated on display:

```
Rapid data transfer                      Q
10 - Adaption
```

– Confirm entry with key Q and then enter other channels in same manner.

– End output (function 06) ⇒ page 25 .

Protected by copyright. Copying for private or commercial purposes, in part or in whole, is not permitted unless authorised by Volkswagen AG. Volkswagen AG does not guarantee or accept any liability with respect to the correctness of information in this document. Copyright by Volkswagen AG.
satelettronica

4.6.3 Resetting service interval display

Note

- *The service interval display must be reset (adapted) for the delivery inspection, each oil change service and each inspection service.*
- *The following sequence is described for the fault reader - V.A.G 1551- , the sequence described in the chapter for the "vehicle diagnosis, testing and information system may also be used"* *⇒ page 1* *.*

– Initiate self-diagnosis of dash panel insert ⇒ page 21 .

Indicated on display:

```
Rapid data transfer                    HELP
Select function XX
```

– Press keys 1 and 0. (10 selects the function "Adaption").

Indicated on display:

```
Rapid data transfer                       Q
10 - Adaption
```

– Confirm entry with Q key.

Indicated on display:

```
Adaption
Enter channel number XX
```

– Select adaption channel of service type to be reset::

Adaptation table:

Type of service:	Adaption channel:	Counter contents:	Adaption value to reset:
Service OIL	10	Distance in 100s of km	00150
Service INSP	11	Distance in 100s of km	00300
Service INSP	12	Time in days	00360

Note

- *Entering the relevant adaption values for the distance recorder is only possible in steps of 100 km, therefore this is shown on display in 100 km.*
- *The adaption value entered must contain 5-digits (e.g. 00150 for adaption value 150 this equates to a distance of 15000 km to next service).*
- *The entered values count down to 0 km.*
- *The time counter for Service INSP can be adapted to max. 360 days.*
- *It is only possible to make direct entries using the keyboard of the fault reader unit!*
- *If an incorrect value is entered the "adaption" function will be terminated and must be re-started.*

Example:

Service interval display for Service OIL requires resetting:

– Press keys 1 and 0.

Protected by copyright. Copyright by Volkswagen AG. Volkswagen AG does not guarantee or accept any liability with respect to the correctness of information in this document. Copyright by Volkswagen AG. Reproduction for commercial purposes, in part or in whole, is not permitted unless authorised by Volkswagen AG.
satelettronica

– Confirm entry with Q key.

Indicated on display: display shows current reading of Service OIL distance recorder (here e.g. 14 equates to a further 1400 km).

```
Channel 10      Adaption            14
                              <- 13 ->
```

– Press ↵ key.

Indicated on display:

```
Channel 10      Adaption             1
Enter adaption value XXXXX
```

The distance recorder must be reset to 150 (equates to 15000 km) to reset the service interval display for Service OIL:

– Enter adaptation value 00150.

Indicated on the display after entering adaptation value 00150:

```
Channel 10        Adaption         150 Q
 Act.val.oil in 100 km
```

– Confirm entry with Q key.

Indicated on display:

```
Channel 10        Adaption         150 Q
Save changed value?
```

– Confirm entry with Q key.

Indicated on display:

```
Channel 10      Adaption       150    ->
Changed value has been saved
```

– Press ↵ key.

Indicated on display:

```
Rapid data transfer                HELP
Select function XX
```

– End output (function 06) ⇒ page 25 .

– Observe odometer display in dash panel insert.

– Switch off ignition.

When the ignition is switched off the service type shown in display goes out.

– Switch on ignition.

After switching on the ignition the service type must no longer be displayed in the odometer display in the dash panel.

The service interval display is now reset.

4.6.4 Checking fuel gauge (adaption)

If the fuel gauge displays the contents of the fuel tank as being to high or too low the fuel gauge needle position in the dash panel insert can be corrected (adapted).

– Perform final control diagnosis for dash panel insert Page ⇒ page 29

Check function of fuel gauge sender if final control diagnosis does not display a fault:

– Check resistance value of fuel gauge sender in measured value block. Reading data block ⇒ page 33 .

If in read data block no short circuit or open circuit in the wiring or the fuel gauge sender is displayed, continue checks:

– Switch off ignition.

– Drain fuel tank completely, then fill with 7 litres of fuel. (-V.A.G 1433A-)

– Initiate self-diagnosis of dash panel insert ⇒ page 21 .

Indicated on display:

```
Rapid data transfer                HELP
Select function XX
```

satelettronica

– Press keys 1 and 0. (10 selects the function “Adaption”).

Indicated on display:

```
Rapid data transfer                    Q
10 - Adaption
```

– Confirm entry with Q key.

Indicated on display:

```
Adaption
Enter channel number XX
```

– Press keys 3 and 0.

– Confirm entry with Q key.

Indicated on display:

```
Channel 30      Adaption        128    ->
                     <- 1           3 ->
```

Note

Entering a value greater than 136 will terminate the “Adaptation”. In this case it will need to be restarted again with the function “10 - Adaptation”.

– The adaptation value can be decreased down to 120 using the 1 key, and with the 3 key it can be increased up to 136, e.g. 132:

Indicated on display:

```
Channel 30      Adaption        132 Q
                     <- 1         3 ->
```

The fuel gauge is adapted correctly when the needle is to the left of the red reserve marking as illustrated!

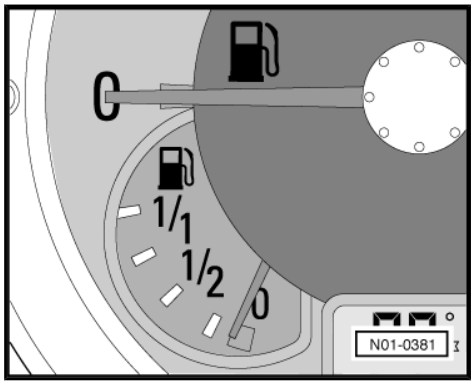

When needle position is OK:

– Confirm entry with Q key.

Indicated on display:

```
Channel 30      Adaption      xxx     Q
Save modified value?
```

– Confirm entry with Q key.

Indicated on display:

```
Channel 30      Adaption      xxx    ->
Modified value is saved
```

– End the adaptation of the fuel gauge with the → key.

Indicated on display:

```
Rapid data transfer                Help
Enter address word XX
```

Note

Renew fuel gauge sender only if fuel gauge cannot be adapted correctly.

– End output (function 06) ⇒ page 25 .

Protected by copyright. Copyright by Volkswagen AG. Volkswagen AG does not guarantee or accept any liability with respect to the correctness of information in this document. Copyright by Volkswagen AG. Volkswagen AG authorised unless authorised by Volkswagen AG. Volkswagen AG does not guarantee or accept any liability with respect to the correctness of information in this document. Copyright by Volkswagen AG. Volkswagen AG. Volkswagen AG does not guarantee or accept any liability with respect to the correctness of information in this document. Copyright by Volkswagen AG. Volkswagen AG. Volkswagen AG does not guarantee or accept any liability with respect to the correctness of information in this document. Copyright by Volkswagen AG. Volkswagen AG. Volkswagen AG does not guarantee or accept any liability with respect to the correctness of information in this document. Copyright by Volkswagen AG.
satelettronica

5 Data bus diagnostic interface

General description:

The dash panel insert is connected to the powertrain data bus in vehicles from 10.99 ▸.

The data bus is also called the CAN data bus.

Data can be exchanged between the powertrain data bus and the diagnosis wire (K-wire) via the data bus diagnostic interface -J533- in the dash panel insert.

The data bus diagnostic interface -J533- must be coded according to the vehicle equipment levels if the dash panel insert is renewed.

Note

The data bus diagnostic interface -J533- in the new (replacement) dash panel insert must be re-coded in all cases, even if the correct code number has already been saved.

The data bus diagnostic interface -J533- in the dash panel insert has its own diagnostic address.

The self-diagnosis must be initiated at the start of fault finding and the stored information read. The fault information displayed is used in conjunction with a fault table which has information on the possible fault causes for pin-pointed repair measures.

5.1 Performing self-diagnosis of data bus diagnostic interface -J533-

5.1.1 Initiating self-diagnosis of data bus diagnostic interface -J533-

Note

The following sequence is described for the fault reader -V.A.G 1551- , the sequence described in the chapter for the "vehicle diagnosis, testing and information system may also be used" *⇒ page 1* *.*

– Connecting fault reader ⇒ page 1 .

– Switch on ignition.

Indicated on display:

```
V.A.G - SELF-DIAGNOSIS                HELP
  1 - Rapid data transfer*
```

```
V.A.G - SELF-DIAGNOSIS                HELP
  2 - Flash code output*
```

*) Appears alternately

– Press key 1 for "Rapid data transfer" mode.

Indicated on display:

```
Rapid data transfer                   HELP
Enter address word XX
```

– Press keys 1 and 9. ("19" is used to enter the address word "Gateway").

Protected by copyright. Copyright by Volkswagen AG. Volkswagen AG does not guarantee or accept any liability with respect to the correctness of information in this document. Copyright by Volkswagen AG. Reproduction unless permitted by Volkswagen AG. Use for private or commercial purposes, in part or in whole, is not permitted unless authorised by Volkswagen AG.

satelettronica

Indicated on display:

```
Rapid data transfer                    Q
19 Gateway
```

– Confirm entry with Q key.

Indicated on display:

```
Rapid data transfer                    Q
Tester sends address word 19
```

Indicated on display:

```
6N0909901  Gateway K  <-> CAN       0001
Coding XXXXX                  WSC   00000
```

– Press → key.

Indicated on display:

```
Rapid data transfer                 HELP
Select function XX
```

– After the HELP key is pressed, a list of the possible functions is printed out ⇒ page 46 .

5.1.2 Overview of available functions

Functions	Page
01 - Reading control unit version	⇒ page 46
02 - Reading fault memory	⇒ page 47
05 - Erasing fault memory	⇒ page 48
06 - Ending output	⇒ page 49
07 - Code control unit	⇒ page 50
08 - Read data block	⇒ page 51

Note

- *Do not select further functions which can be printed out after pressing the HELP key.*
- *After the function is finished the fault reader -V.A.G 1551- returns to the following starting position:*

Indicated on display:

```
Rapid data transfer                 HELP
Select function XX
```

5.1.3 Reading control unit version

Note

The following sequence is described for the fault reader -V.A.G 1551- , the sequence described in the chapter for the "vehicle diagnosis, testing and information system may also be used" ⇒ page 1 .

– Connecting fault reader ⇒ page 1 .

– Switch on ignition.

Indicated on display:

```
V.A.G - SELF-DIAGNOSIS              HELP
  1 - Rapid data transfer*
```

```
V.A.G - SELF-DIAGNOSIS              HELP
  2 - Flash code output*
```

*) Appears alternately

– Press key 1 for "Rapid data transfer" mode.

satelettronica

Indicated on display:

```
Rapid data transfer                    HELP
Enter address word XX
```

– Press keys 1 and 9. (“19” is used to enter the address word “Gateway”).

Indicated on display:

```
Rapid data transfer                       Q
19 Gateway
```

– Confirm entry with Q key.

Indicated on display:

```
Rapid data transfer                       Q
Tester sends address word 19
```

Indicated on display:

```
6N0909901  Gateway K  <-> CAN        0001
Coding XXXXX                  WSC   00000
```

- Top line: ID no. of control unit, System designation (Gateway K <-> CAN)[18], Version number
- Bottom line: Code number[17], Dealership number

17) Depends on control units connected to the powertrain data bus

18) The data bus diagnostic interface -J533- in the dash panel is referred to as “Gateway” in the self-diagnosis.

– Press → key.

Indicated on display:

```
Rapid data transfer                    HELP
Select function XX
```

– End output (function 06) ⇒ page 49 .

5.1.4 Reading fault memory

Note

The following sequence is described for the fault reader -V.A.G 1551- , the sequence described in the chapter for the “vehicle diagnosis, testing and information system may also be used” *⇒ page 1* *.*

– Initiating self-diagnosis of data bus diagnostic interface -J533- ⇒ page 45 .

Note

The displayed fault information is only updated when the self-diagnosis is started or the function 05 “Erase fault memory” is selected. The information is not continuously updated.

– Switch on the printer with the PRINT key (indicator lamp in key lights up).

Indicated on display:

```
Rapid data transfer                    HELP
Select function XX
```

– Press keys 0 and 2. (02 selects the function “Read fault memory”).

Indicated on display:

```
Rapid data transfer                       Q
02 - Read fault memory
```

– Confirm entry with Q key.

The number of stored faults appears in the display.

```
X faults recognized!
```

The stored faults are displayed and printed out one after another.

Protected by copyright. Copyright by Volkswagen AG. Volkswagen AG does not guarantee or accept any liability with respect to the correctness of information in this document. Copyright by Volkswagen AG. Reproduction, in part or in whole, is not permitted unless authorised by Volkswagen AG.
satelettronica

– Check print out against fault table and rectify all faults as necessary ⇒ page 49 .

Note

If "No fault recognised" is displayed the programme will return to the start point after pressing [→] key.

```
No fault recognized!                    ->
```

Indicated on display:

```
Rapid data transfer                     HELP
Select function XX
```

If something else is displayed: ⇒ Fault reader operating instructions .

– End output (function 06) ⇒ page 49 .

5.1.5 Erasing fault memory

Note

The following sequence is described for the fault reader - V.A.G 1551- , the sequence described in the chapter for the "vehicle diagnosis, testing and information system may also be used" *⇒ page 1* .

– Initiating self-diagnosis of data bus diagnostic interface -J533- ⇒ page 45 .

Note

After erasing the fault memory its contents will be automatically displayed. If the fault memory cannot be erased, read the fault memory again and repair any faults found.

Prerequisites:

- Fault memory read ⇒ page 47 .
- All faults repaired.

After fault memory has been successfully read:

Indicated on display:

```
Rapid data transfer                     HELP
Select function XX
```

– Press keys [0] and [5]. (05 selects the function "Erase fault memory").

Indicated on display:

```
Rapid data transfer                     Q
05 Erase fault memory
```

– Confirm entry with [Q] key.

Indicated on display:

```
Rapid data transfer                     ->
Fault memory is erased!
```

The fault memory is now erased.

– Press [→] key.

Indicated on display:

```
Rapid data transfer                     HELP
Select function XX
```

– End output (function 06) ⇒ page 49 .

Protected by copyright. Copying for private or commercial purposes, in part or in whole, is not permitted unless authorised by Volkswagen AG. Volkswagen AG does not guarantee or accept any liability with respect to the correctness of information in this document. Copyright by Volkswagen AG.
satelettronica

Note

If this appears in the display, the test sequence is faulty.

```
Warning!
Fault memory was not read
```

If this appears in the display, the test sequence is faulty.

```
Rapid data transfer                    ->
Fault memory was not read
```

Adhere exactly to test sequence: first read fault memory, if necessary repair faults, then erase.

5.1.6 Ending output

Indicated on display:

```
Rapid data transfer                    HELP
Select function XX
```

– Press keys 0 and 6. (06 selects the function “End output”).

Indicated on display:

```
Rapid data transfer                       Q
06 - End output
```

– Confirm entry with Q key.

Indicated on display:

```
Rapid data transfer                    Help
Enter address word XX
```

– Switch off ignition.

– Disconnect fault reader -V.A.G 1551- .

5.2 Fault table

Note

- *The following table lists all the faults that can be recognised by the data bus diagnostic interface -J533- . The faults are listed in order according to their 5-figure code numbers.*
- *Before renewing components, check the wiring and connections to these components as well as the earth connections, referring to the current flow diagram.*
- *When repair has been carried out, the fault memory must always be read again and erased.*

Indicated on display	Possible fault cause	Possible effects	Fault elimination
No fault recognized!	The self-diagnosis is finished If “No fault recognized” appears after completing repairs.		
01044 Control unit incorrectly coded.			

Protected by copyright. Copying for private or commercial purposes, in part or in whole, is not permitted unless authorised by Volkswagen AG. Volkswagen AG does not guarantee or accept any liability with respect to the correctness of information in this document. Copyright by Volkswagen AG.
satelettronica

Indicated on display	Possible fault cause	Possible effects	Fault elimination
	– A control unit connected to the powertrain data bus has been incorrectly coded. – A control unit connected to the powertrain data bus is defective.	Poor driving characteristics (gear change jolt, load change jolt) No vehicle dynamics program	– Read data block ⇒ page 51 . – Read fault memories of all control units connected to powertrain data bus and rectify any faults. – Check and if necessary correct control unit coding. – If necessary renew control unit.

5.3 Coding data bus diagnostic interface - J533-

Note

- *The following sequence is described for the fault reader - V.A.G 1551- , the sequence described in the chapter for the "vehicle diagnosis, testing and information system may also be used"* ⇒ page 1 .
- *The data bus diagnostic interface -J533- must be coded according to the vehicle equipment levels if the dash panel insert is renewed.*
- *The data bus diagnostic interface -J533- in the new (replacement) dash panel insert must be re-coded in all cases, even if the correct code number has already been saved.*

– Initiating self-diagnosis of data bus diagnostic interface -J533- ⇒ page 45 .

Indicated on display:

```
Rapid data transfer                    Help
Enter address word XX
```

– Press keys 0 and 7. (07 selects the function "Code control unit").

Indicated on display:

```
Rapid data transfer                       Q
07 - Coding control unit
```

– Confirm entry with Q key.

Indicated on display:

```
Code control unit
Enter code number XXXXX          (0-32000)
```

– Enter code number compiled from following code table.

Control units on powertrain data bus	Code no.:
Automatic gearbox	00001
Anti-lock brake system (ABS)	00002
Combi-instrument	00004
Steering angle sensor	00008
Airbag	00016
Air conditioning system	00032

Copyright by Volkswagen AG. Volkswagen AG does not guarantee or accept any liability with respect to the correctness of information in this document. Copyright by Volkswagen AG. Reproduction, in part or in whole, is not permitted without authorisation of Volkswagen AG. Copyright by Volkswagen AG. Reproduction, in part or in whole, is not permitted for commercial purposes or private use.
satelettronica

Power assisted steering	00064

The code numbers of the control units connected to the power-train data bus must be added together.

Note

The combi-instrument "00004" must always be coded.

Example:

Airbag + combi-instrument + ABS:

00016 + 00004 + 00002 = 00022

Indicated on display (example):

```
6N0909901  Gateway K  <-> CAN        0001
Coding 00022                  WSC   00000
```

– Confirm entry with Q key.

Indicated on display:

```
Rapid data transfer                  HELP
Select function XX
```

– End output (function 06) ⇒ page 49 .

5.4 Reading data block

Note

- *The following sequence is described for the fault reader -V.A.G 1551- , the sequence described in the chapter for the "vehicle diagnosis, testing and information system may also be used"* *⇒ page 1* .
- *Display group 125* *⇒ page 52* *and display group 126* *⇒ page 53* *can be displayed.*

– Initiating self-diagnosis of data bus diagnostic interface -J533- ⇒ page 45 .

Indicated on display:

```
Rapid data transfer                  Help
Enter address word XX
```

– Press keys 0 and 8 (08 initiates the function "Read data value block").

Indicated on display:

```
Rapid data transfer                     Q
08 - Read data block
```

– Confirm entry with Q key.

Indicated on display:

```
Read data block                      Help
Enter display group number XXX
```

The display group number 001 is an example, to illustrate the sequence.

– Press the keys 0, 0 and 1 for "Display group number 1" and then click on the Q key to confirm the entry.

Indicated on display: (1...4 = display zones)

```
Reading data block 1                   ->
         1         2         3         4
```

Note

To change to another display group proceed as follows:

Protected by copyright. Copying for private or commercial purposes, in part or in whole, is not permitted unless authorised by Volkswagen AG. Copyright by Volkswagen AG. Volkswagen AG does not guarantee or accept any liability with respect to the correctness of information in this document.
satelettronica

Display group	Fault reader - V.A.G 1551-	Fault reader - V.A.G 1552-
Higher	Press key 3	Press → key
Lower	Press key 1	Press → key
Skip	Press C key.	Press C key.

– Press C key to exit the current display group.

Indicated on display:

```
Read data block                    Help
Enter display group number XXX
```

– Now the desired display group number can be entered or press C key again to exit the function “Read data block”.

Indicated on display (after pressing C key again).

```
Rapid data transfer                Help
Enter address word XX
```

– End output (function 06) ⇒ page 49 .

5.4.1 Display group 125

Note

- *The display always shows the actual sender and sensor values. The values on the dash panel insert are filtered and therefore they can vary!*
- *The following data blocks show the condition displays for all the control units connected to the powertrain data bus.*
- *The display zones for absent control units remain empty.*

Structure of display contents for display group number 125

Display group 125						
Read data block 125 →				▾ Indicated on display		
xx x	xx x	xx x	xx x	▾ Display zones	Target value	Evaluation
				empty[19]	empty[19]	
				ABS control unit	ABS 1	⇒ page 53
				Automatic gearbox control unit	Gbx. 1	⇒ page 53
				Engine	Engine 1	⇒ page 52

19) here, “empty” means that there is nothing in the display zone

Evaluating display group number 125

Display zone	Designation	Display contents	Fault elimination
1	Engine control unit.	Engine 1 = OK, data reception from engine control unit via powertrain data bus OK. Engine 0 = not OK, data reception from engine control unit via powertrain data bus not OK.	If data reception is not OK: – Check data bus to control unit referring to current flow diagram.

Protected by copyright. Copyright by Volkswagen AG. Copying or publication, in part or in whole, is not permitted unless authorised by Volkswagen AG. Volkswagen AG does not guarantee or accept any liability with respect to the correctness of information in this document.
satelettronica

Display zone	Designation	Display contents	Fault elimination
2	Automatic gearbox control unit.	Gear. 1 = OK, data reception from automatic gearbox control unit via powertrain data bus OK. Gear. 0 = not OK, no data reception from automatic gearbox control unit via powertrain data bus.	
3	ABS control unit.	ABS 1 = OK, data reception from ABS control unit via powertrain data bus OK ABS 0 = not OK, no data reception from ABS control unit via powertrain data bus.	If data reception is not OK: – Check data bus to control unit referring to current flow diagram.

5.4.2 Display group 126

Note

- *The display always shows the actual sender and sensor values. The values on the dash panel insert are filtered and therefore they can vary!*
- *The following data blocks show the condition displays for all the control units connected to the powertrain data bus.*
- *The display zones for absent control units remain empty.*

Structure of display contents for display group number 126

Display group 126						
Read data block 126 → xx xxx xxx xx x				▾ Indicated on display		
1	2	3	4	▾ Display zones	Target value	Evaluation
				Steering	Steering 1	⇒ page 54
				Air conditioner control unit	Air. Cond.1	⇒ page 54
				Airbag control unit	Airbag 1	⇒ page 54
				Steering angle sensor	St.ang. 1	⇒ page 53

Evaluating display group number 126

Display zone	Designation	Display contents	Fault elimination
1	Steering angle sensor.	St. ang.1 = OK, data reception from steering angle sender via powertrain data bus OK St. ang. 0 = not OK, no data reception from steering angle sender via powertrain data bus.	If data reception is not OK: – check data bus to steering angle sender referring to current flow diagram.

Protected by copyright. Copying for private or commercial purposes, in part or in whole, is not permitted unless authorised by Volkswagen AG. Volkswagen AG does not guarantee or accept any liability with respect to the correctness of information in this document. Copyright by Volkswagen AG.
satelettronica

Display zone	Designation	Display contents	Fault elimination
2	Airbag control unit.	Airbag 1 = OK, data reception from airbag control unit via powertrain data bus OK. Airbag 0 = not OK, no data reception from airbag control unit via powertrain data bus.	If data reception is not OK: – Check data bus to control unit referring to current flow diagram.
3	Air conditioner control unit.	Air Cond.1 = OK, data reception from air conditioning system control unit via powertrain data bus OK Air Cond.0 = not OK, no data reception from air conditioning system control unit via powertrain data bus.	If data reception is not OK: – Check data bus to control unit referring to current flow diagram.
4	Steering.	Steering 1 = OK, data reception from steering control unit via powertrain data bus OK Steering 0 = not OK, no data reception from Steering control unit via powertrain data bus.	If data reception is not OK: – Check data bus to control unit referring to current flow diagram.

Protected by copyright. Copying for private or commercial purposes, in part or in whole, is not permitted unless authorised by Volkswagen AG. Volkswagen AG does not guarantee or accept any liability with respect to the correctness of information in this document. Copyright by Volkswagen AG.

satelettronica

27 – Starter, current supply, CCS

1 Battery

Note

- *Due to technical reasons in production, various batteries have been installed.*
- *The procedures described here apply to all types of batteries. Deviations and type specific procedures for batteries:*

- with magic eye and sealed cell plugs ⇒ page 57 ,
- with magic eye and no cell sealing plugs ⇒ page 57 ,
- with no magic eye ⇒ page 61 .

1.1 Fundamentals for batteries

To ensure long use of the battery, the battery must be checked, serviced and maintained according to the instructions in this manual.

Apart from supplying energy for starting the engine, the battery has other tasks: it acts as a buffer and supplies electrical energy to the complete vehicle electrical system.

1.2 Battery handling instructions

- Battery terminals must no longer be greased.
- Battery terminal clamps must be fitted only by hand without force to prevent damage to battery housing.
- The torque setting for the battery clamps -arrow- is 6 Nm.
- The torque setting for the additional terminals on the battery terminal clamp is 6 Nm.
- Check vehicle equipment (radio, clock and convenience electrics etc.) according to Workshop Manual and/or Owner's Manual when the battery has been disconnected and then reconnected.

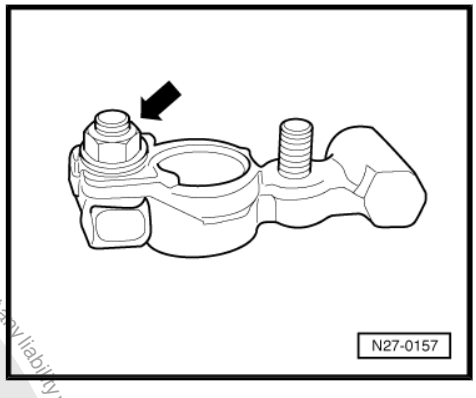

1.2.1 Warnings and safety procedures when handling lead-acid batteries

1 - Fires, sparks, naked lights and smoking are prohibited:

– Avoid sparks as well as electrostatic discharge when working with cables and electrical units.

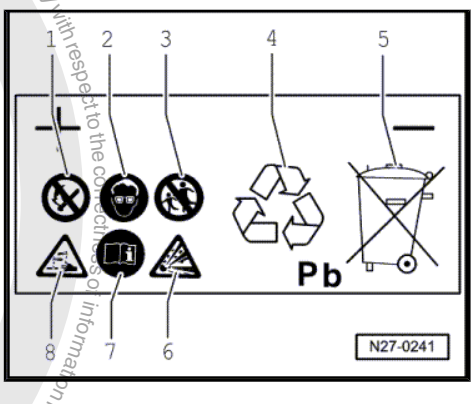

satelettronica
Protected by copyright. Copying for private or commercial purposes, in part or in whole, is not permitted unless authorised by Volkswagen AG. Volkswagen AG does not guarantee or accept any liability with respect to the correctness of information in this document. Copyright by Volkswagen AG.

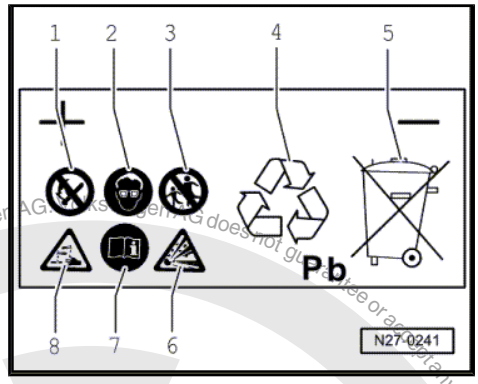

– Avoid short circuits (never lay a tool on a battery).

2 - Wear eye protection.

3 - Keep children away from acid and batteries.

4 - Disposal:

– Dispose of old batteries at a battery collection point.

5 - Never dispose of old batteries in household waste system!

6 - Danger of explosion:

– A highly explosive gas is produced when batteries are charged.

7 - Follow instructions on battery, in electrical system workshop manual and in owner's manual.

8 - Danger of acid burns:

– Battery acid is very caustic, therefore wear eye protection and gloves.

– Do not tilt battery. Acid can leak out of the gas vents of some batteries.

1.3 Visual check

It is essential first to check the external condition and the terminals of the battery visually before performing more extensive tests.

Note

- *Check whether the battery housing is damaged. Electrolyte can leak out if the housing is damaged. Battery acid leakage can cause severe damage to the vehicle, so treat vehicle parts which have come in contact with battery acid immediately with acid neutraliser or soapy water.*
- *Check whether the battery terminals (battery wire connections) are damaged. The necessary contact on the terminals cannot be guaranteed if the terminals are damaged. When connecting clamps to the terminals, tighten the clamps to the torque specified in this workshop manual. If the clamps are not correctly seated and tightened, the wiring could burn, leading in turn to malfunctions in the electrical system. In such cases, the functionality of the vehicle could be substantially impaired.*

1.4 Checking battery via magic eye

The magic eye provides information concerning the level of the electrolyte and the charge state of the battery.

Note

- *Because the magic eye is located in only one cell, the display applies only to this cell. An exact determination of battery's condition is only possible through a load test* *⇒ page 66* *.*
- *Especially when a battery is being charged, including during normal vehicle operation, air bubbles may form below the magic eye. These distort the colour displayed by the magic eye.*
- *Please note when the magic eye is colourless and the battery is more than 5 years old the battery should be replaced with a new battery.*

Protected by copyright. Copyright by Volkswagen AG.
Volkswagen AG does not guarantee or accept any liability with respect to the correctness of information in this document.
Copyright by Volkswagen AG.
Protected by copyright. Copying for private or commercial purposes, in part or in whole, is not permitted unless authorised by Volkswagen AG.
satelettronica

– Before performing a visual check, tap the magic eye lightly and carefully with the handle of a screwdriver.

The air bubbles, which can influence the display, will dissipate. The colour display of the “magic eye” will be more accurate.

Note

- *The magic eye can be located at various positions on the battery.*
- *Three different colour displays are possible:*

– Green → the battery is charged sufficiently.

– Black → no charge or charged insufficiently; the battery must be charged ⇒ page 64 .

– Colourless or yellow → the battery must be renewed.

– Colourless or yellow → the critical electrolyte level has been reached, it is absolutely necessary to top-up with distilled water ⇒ page 60 . Subsequently perform a battery load test ⇒ page 66 . Batteries older than 5 years should be replaced.

1.5 Batteries with magic eye and no cell sealing plugs

You can identify these batteries by the magic eye -1- and the cover -2- (as illustrated).

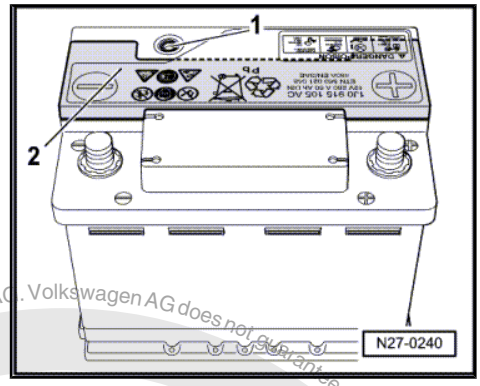

Caution

The cover -2- is only for filling during production. The cover must not be removed under any circumstances, or the battery will be damaged. The battery will be unusable.

Thanks to changes in design, it has been possible to produce a new generation of maintenance-free batteries. The current state of the battery can be checked via the magic eye -1-.

1.6 Batteries with magic eye and sealed cell plugs

These batteries can be recognised by the magic eye -1- and the sealed cell plugs -2-.

These batteries remain efficient with a minimum of maintenance and continue so for a long time. The current state of the battery can be checked via the magic eye -1-.

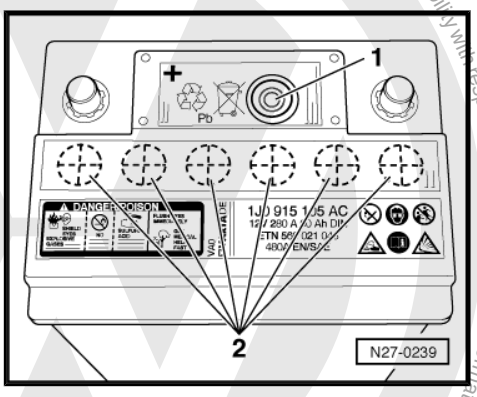

1.6.1 Checking and correcting electrolyte level

Special tools and workshop equipment required

Protected by copyright. Copyright by Volkswagen AG.
Volkswagen AG, Volkswagen AG does not guarantee or accept any liability with respect to the correctness of information in this document. Copyright by Volkswagen AG.
satelettronica

- Commercial hydrometer (used only to draw-off excess electrolyte)

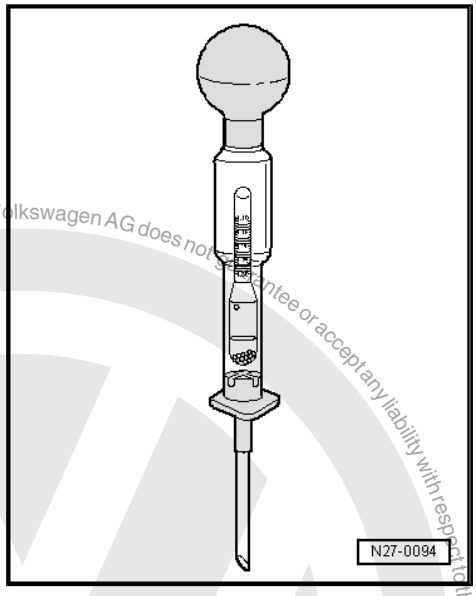

- Battery filler bottle -VAS 5045-

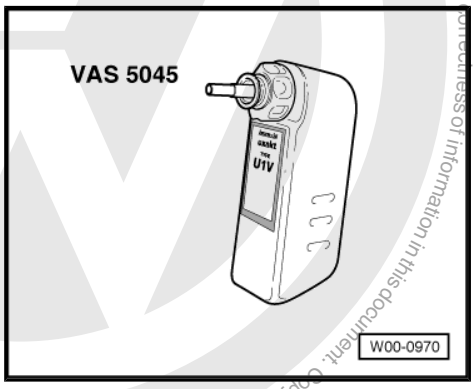

Protected by copyright. Copying for private or commercial purposes, in part or in whole, is not permitted unless authorised by Volkswagen AG. Volkswagen AG does not guarantee or accept any liability with respect to the correctness of information in this document. Copyright by Volkswagen AG.

satelettronica

WARNING

When handling battery acid, you must absolutely adhere to the accident prevention procedures.

Suitable protective clothing must be worn.

Use only an electric torch to illuminate the inside of the battery housing.

Never illuminate the inside of a battery housing with an open flame.

Never work with a naked flame or burning cigarette in the vicinity of a battery.

Obey all regulations for the disposal of batteries and battery acid when disposing of batteries.

A correct electrolyte level in the battery is an important factor in ensuring a long battery service life.

When the electrolyte level is too low the cell plates project above the surface and there is a loss of battery capacity (loss of power). If the cell plates are not covered by electrolyte, the plates, the bridge plates and the cell connectors will corrode. This corrosion can cause an internal open current circuit with sparking (danger of explosion).

If the electrolyte level is too high, damage will be caused outside the battery by the leaking battery acid, e.g. components in engine compartment (electrolyte must be extracted ⇒ page 60).

– Check electrolyte level visually.

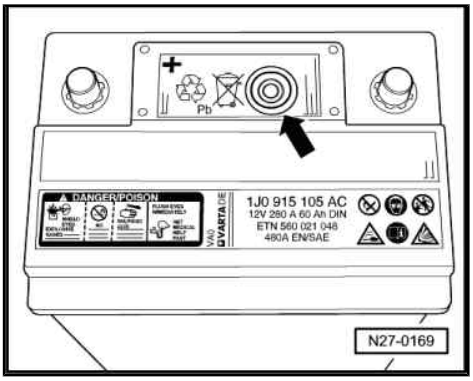

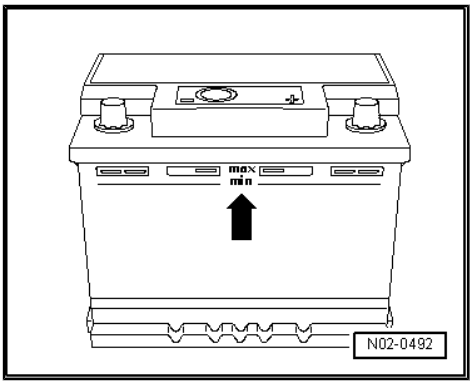

Note

- *The electrolyte level can be read at the magic eye -arrow-.*
- *A visual check of the battery electrolyte level is all that is required on batterie with recognisable minimum and maximum marks on the battery housing.*

The electrolyte level is OK when the fluid level is level with the max. marking.

If there are no min and max marks on the battery housing or if the electrolyte level cannot be seen (black housing).

– Switch off ignition and all electrical consumers.

– Pull plastic film off battery housing (over the cell plugs). Ensure the film with warning notes is not pulled off when doing this.

– Unscrew cell plugs -2-.

– It is then possible to look inside battery to check electrolyte level.

– For illumination only use a torch.

– Check electrolyte level visually.

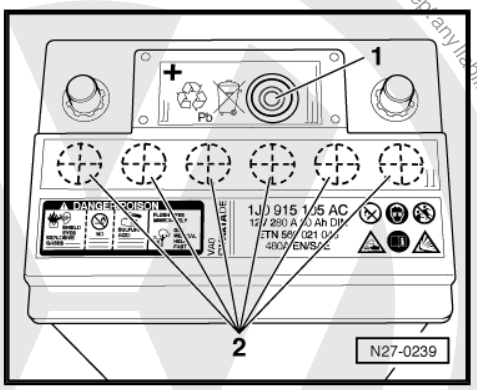

The electrolyte level is OK when it is up to the internal electrolyte level mark -1-.

The plastic peg equates to the max, marking for the electrolyte level.

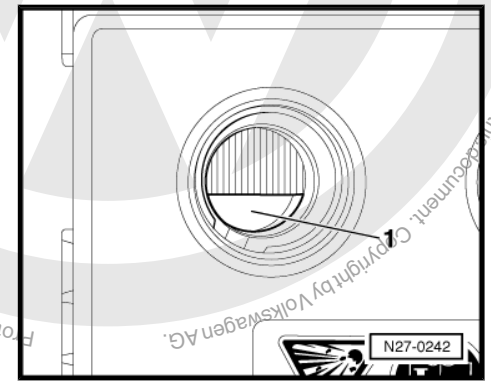

Protected by copyright. Copying for private or commercial purposes, in part or in whole, is not permitted unless authorised by Volkswagen AG. Volkswagen AG does not guarantee or accept any liability with respect to the correctness of information in this document. Copyright by Volkswagen AG.
satelettronica

1.6.2 Replenishing with distilled water

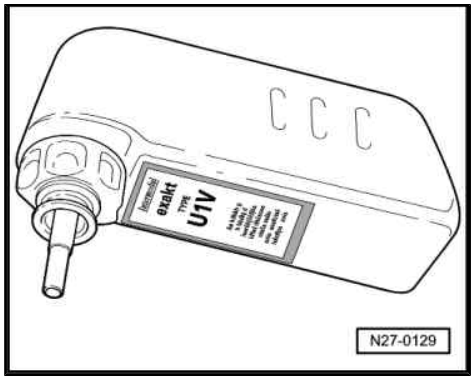

Note

- *If the battery must be topped-up with distilled water, the battery filler bottle -VAS 5045- is the ideal medium for this work process. The design of the filler nozzle prevents any spilling or over filling. Once the max. fill level has been reached, further filling of the battery is prevented due to the special nozzle feature of the battery filler bottle -VAS 5045- .*
- *Use distilled water only, this prevents contamination of the battery electrolyte and the associated increased self-discharge.*

– If the battery electrolyte level is too low, correct as follows:

– Unscrew cell plugs -2-.

– Top-up to max. mark with distilled water using battery filler bottle -VAS 5045- .

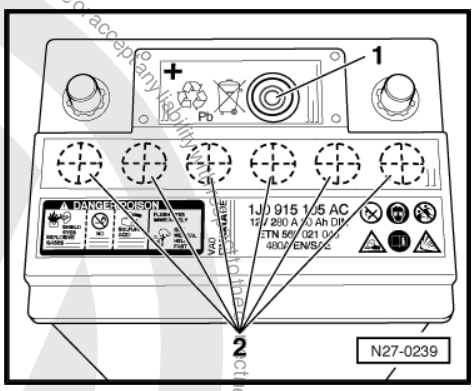

Note

If battery has been topped-up with distilled water a battery load test must be carried out *⇒ page 66* *.*

1.6.3 Extracting electrolyte

– If electrolyte level is too high, extract excess electrolyte using a commercial hydrometer. The electrolyte level must align with the internal electrolyte level marking -1-.

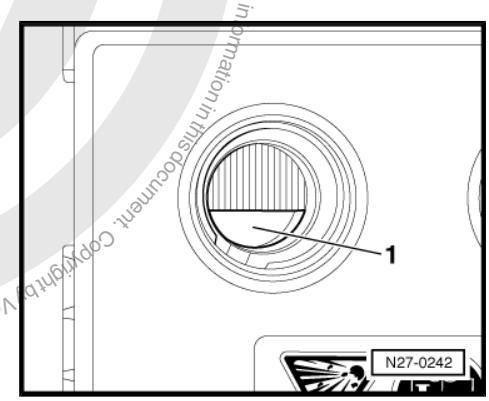

Note

Observe disposal regulations!

– Once the battery has been topped-up or the electrolyte level has been drawn off to the correct level, the cells must be sealed only with original cell plugs.

It is imperative that the original sealing plugs are used in the battery threaded openings (filling points for battery cells), to ensure the battery is sealed correctly.

Use original sealing plugs of same construction if lost or damaged.

The plugs must be equipped with an O-ring seal.

Protected by copyright. Copying for private or commercial purposes, in part or whole, is not permitted unless authorised by Volkswagen AG. Volkswagen AG does not guarantee or accept any liability with respect to the correctness of information in this document. Copyright by Volkswagen AG.
satelettronica

1.7 Batteries with no magic eye

Batteries with no magic eye

Protected by copyright. Copying for private or commercial purposes, in part or in whole, is not permitted unless authorised by Volkswagen AG. Volkswagen AG does not guarantee or accept any liability with respect to the correctness of information in this document. Copyright by Volkswagen AG.

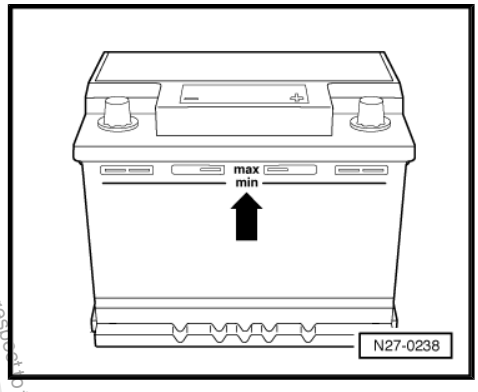

1.7.1 Checking and correcting electrolyte level

Special tools and workshop equipment required

- Commercial hydrometer (used only to draw-off excess electrolyte)

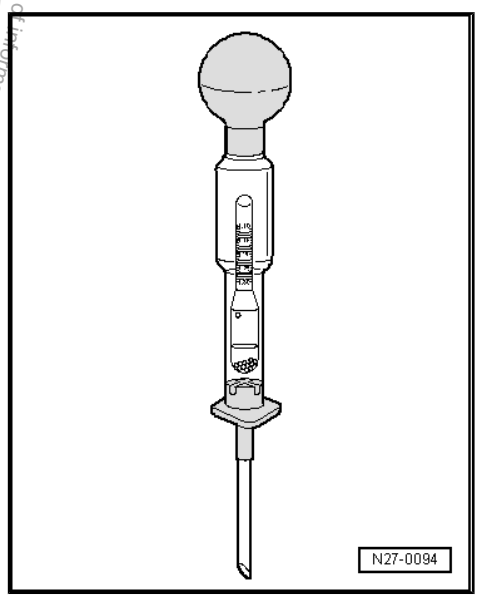

- Battery filler bottle -VAS 5045-

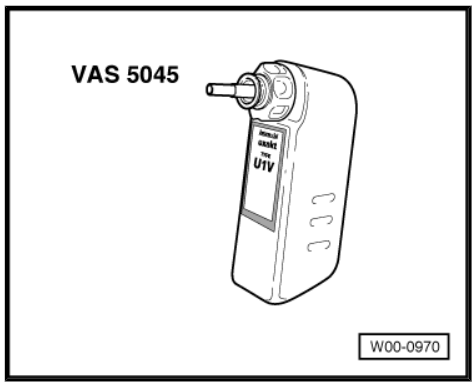

satelettronica

Protected by copyright. Copying or distribution is prohibited unless authorised by Volkswagen AG. Volkswagen AG does not guarantee or accept any liability with respect to the correctness of information in this document. Copyright by Volkswagen AG.

WARNING

When handling battery acid, you must absolutely adhere to the accident prevention procedures.

Suitable protective clothing must be worn.

Use only an electric torch to illuminate the inside of the battery housing.

Never illuminate the inside of a battery housing with an open flame.

Never work with a naked flame or burning cigarette in the vicinity of a battery.

Obey all regulations for the disposal of batteries and battery acid when disposing of batteries.

A correct electrolyte level in the battery is an important factor in ensuring a long battery service life.

When the electrolyte level is too low the cell plates project above the surface and there is a loss of battery capacity (loss of power). If the cell plates are not covered by electrolyte, the plates, the bridge plates and the cell connectors will corrode. This corrosion can cause an internal open current circuit with sparking (danger of explosion).

If the electrolyte level is too high, damage will be caused outside the battery by the leaking battery acid, e.g. components in engine compartment (electrolyte must be extracted ⇒ page 64).

– Check electrolyte level visually.

Note

A visual check of the battery electrolyte level is all that is required on batteries with recognisable minimum and maximum marks on the battery housing.

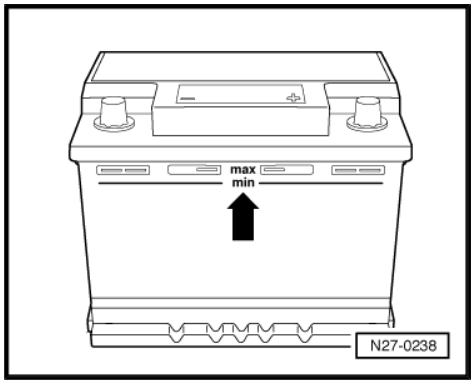

The electrolyte level is OK when the fluid level is level with the max. marking.

If there are no min and max marks on the battery housing or if the electrolyte level cannot be seen (black housing).

– Switch off ignition and all electrical consumers.

– Remove cell plugs.

– It is then possible to look inside battery to check electrolyte level.

– For illumination only use a torch.

– Check electrolyte level visually.

satelettronica

The electrolyte level is OK when it is up to the internal electrolyte level mark -1-.

The plastic peg equates to the max, marking for the electrolyte level.

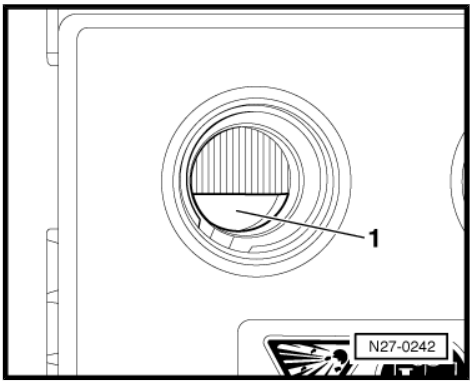

1.7.2 Replenishing with distilled water

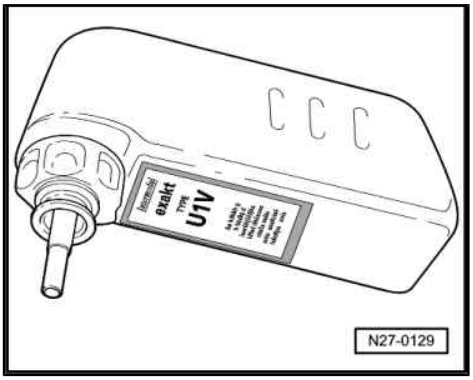

Note

- *If the battery must be topped-up with distilled water, the battery filler bottle -VAS 5045- is the ideal medium for this work process. The design of the filler nozzle prevents any spilling or over filling. Once the max. fill level has been reached, further filling of the battery is prevented due to the special nozzle feature of the battery filler bottle -VAS 5045- .*
- *Use distilled water only, this prevents contamination of the battery electrolyte and the associated increased self-discharge.*

– If the battery electrolyte level is too low, correct as follows:

– Remove cell plugs.

– Top-up to max. mark with distilled water using battery filler bottle -VAS 5045- .

Note

If battery has been topped-up with distilled water a battery load test must be carried out *⇒ page 66* *.*

Protected by copyright. Copyright by Volkswagen AG. Volkswagen AG does not guarantee or accept any liability with respect to the correctness of information in this document. Copyright by Volkswagen AG. Volkswagen AG. Copying for private or commercial purposes, in part or in whole, is not permitted unless authorised by Volkswagen AG.

satelettronica

1.7.3 Extracting electrolyte

– If electrolyte level is too high, extract excess electrolyte using a commercial hydrometer. The electrolyte level must align with the internal electrolyte level marking -1-.

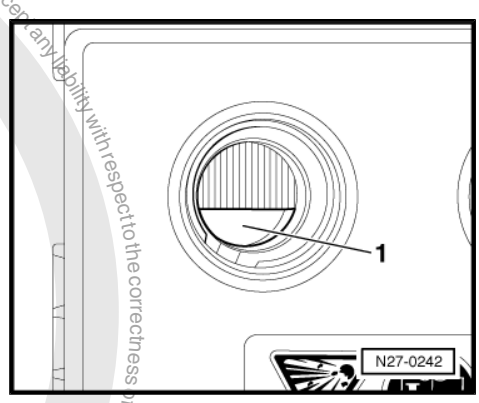

Note

Observe disposal regulations!

– Once the battery has been topped-up or the electrolyte level has been drawn off to the correct level, the cells must be sealed only with original cell plugs.

It is imperative that the original sealing plugs are used in the battery threaded openings (filling points for battery cells), to ensure the battery is sealed correctly.

Use original sealing plugs of same construction if lost or damaged.

The plugs must be equipped with an O-ring seal.

Note

- *On batteries with a hose for central venting ensure that the hose is not blocked or pinched.*
- *The central venting ensures that the gasses are vented from all cells to a pre-defined point.*

1.8 Charging battery

WARNING

When handling battery acid, you must absolutely adhere to the accident prevention procedures.

Suitable protective clothing must be worn.

Use only an electric torch to illuminate the inside of the battery housing.

Never illuminate the inside of a battery housing with an open flame.

Never work with a naked flame or burning cigarette in the vicinity of a battery.

Obey all regulations for the disposal of batteries and battery acid when disposing of batteries.

Note

Do not exceed a charging voltage of 14.4 V.

Special tools and workshop equipment required

Volkswagen AG. Volkswagen AG does not guarantee or accept any liability with respect to the correctness of information in this document. Copyright by Volkswagen AG.
Copyright. Copying for private or commercial purposes, in part or in whole, is not permitted unless authorised by Volkswagen AG.
satelettronica

- Battery charger -VAS 5095A-

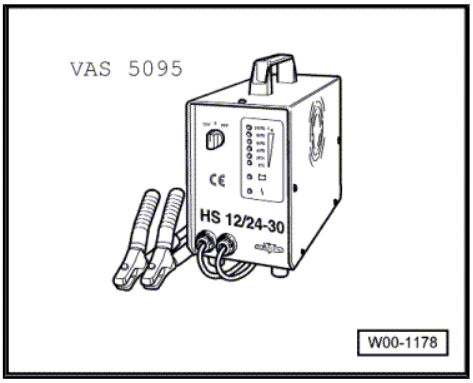

Note

- *The battery charging unit -VAS 5095A- charges without current or voltage peaks. Data measurement, engine control unit, airbag and telephone are not affected. The battery can remain in the vehicle while it is being charged and need not be disconnected.*
- *The battery must have a temperature of at least 10 °C.*
- *Batteries must not be charged quickly; quick-charging batteries damages them.*
- *If the battery has cell plugs, do not open them while the battery is charging.*

1.8.1 Performing battery charging

– Switch off ignition and all electrical consumers.

– Connect battery charger positive cable to battery positive terminal.

– Connect battery charger negative cable to battery negative terminal.

– Charge battery according to instruction manual for battery charger.

1.8.2 Procedures for totally discharged batteries

Remarks concerning totally discharged batteries:

Caution

Totally discharged batteries freeze prematurely.

Frozen batteries should no longer be used.

Batteries that have not been used for a long time e.g. vehicles that have been stored, self-discharge.

In totally discharged batteries, the electrolyte is comprised almost entirely of water because the acid content is so low.

Totally discharged batteries sulphate, that is, the entire plate surfaces of the battery harden.

If a battery is recharged shortly after it has totally lost its charge, the sulphation will dissipate.

Protected by copyright. Copying for private or commercial purposes, in part or in whole, is not permitted unless authorised by Volkswagen AG. Volkswagen AG does not guarantee or accept any liability with respect to the correctness of information in this document. Copyright by Volkswagen AG.
satelettronica

If these batteries are not recharged, the plates continue to harden and the ability to recharge is reduced. The result of which is a reduction in the battery output.

Charge battery ⇒ page 64 .

The charge period must be at least 24 hours.

After charging battery, perform battery discharge (load) test ⇒ page 66 .

1.9 Battery load test

Special tools and workshop equipment required

- Battery tester with printer -VAS 5097A-

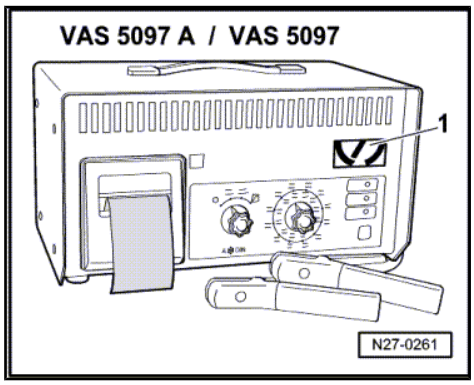

- Battery tester with printer -VAS 5097- , converted (software modification / can be recognised by logo -1-).

Note

There is no need to remove or disconnect the battery when using battery tester with printer -VAS 5097- or battery tester with printer -VAS 5097A- . Nor must the battery be disconnected.

1.9.1 Performing battery load test

– Switch off ignition.

– Connect test lead clamps to battery terminals ⇒ Operating instructions of battery tester

The clamps must have good contact with the battery terminals.

– The load current varies depending on the battery capacity, and must be set on the tester accordingly ⇒ Operating manual of battery tester .

Protected by copyright. Copying for private or commercial purposes, in part or in whole, is not permitted unless authorised by Volkswagen AG. Volkswagen AG does not guarantee or accept any liability with respect to the correctness of information in this document. Copyright by Volkswagen AG.
satelettronica

– Perform battery load test according to instruction manual for battery tester and compare test printout -arrow- with following table.

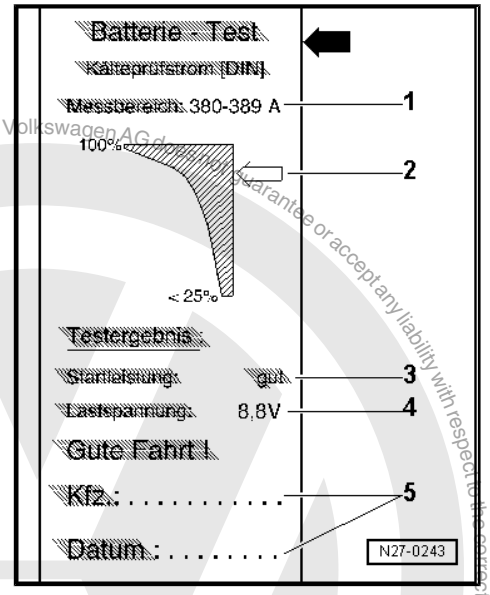

Remarks concerning test printout:

1 - Measuring range selected on tester

2 - Diagram (arrow indicates battery condition)

3 - Test result

4 - Battery voltage during load test

5 - Vehicle data and date (to be completed by person performing test).

Note

The test printout is required for warranty claims.

Printout from battery tester	Measure to be performed
Starting output very good	Battery OK
Starting output good	Battery OK
Starting output sufficient	Recharge battery[20)]
Starting output poor	Recharge battery[20)]
Starting output very poor	Recharge battery[20)]
Cannot be tested	Recharge battery[20)]

20) After recharging the battery, perform the battery voltage drop test once again. If after battery is recharged, the display shows “starting output sufficient, starting output poor, starting output very poor or not testable”, replace battery.

Explanation of battery load test:

Because of the high load on the battery during this test (a high current flows) the battery voltage drops.

If the battery is OK, the voltage value drops only to the minimum voltage.

If the battery is defective or has a low charge, the battery voltage quickly drops below the minimum voltage.

After the test is completed, these low voltage values remain over a longer period, and the voltage increases very slowly again.

Protected by copyright. Copyright by Volkswagen AG. Volkswagen AG does not guarantee or accept any liability with respect to the correctness of information in this document. Copyright by Volkswagen AG. Copying for private or commercial purposes, in part or in whole, is not permitted unless authorised by Volkswagen AG.
satelettronica

2 Removing and installing battery

2.1 Removing and installing battery

Special tools and workshop equipment required

- Torque wrench -V.A.G 1331-

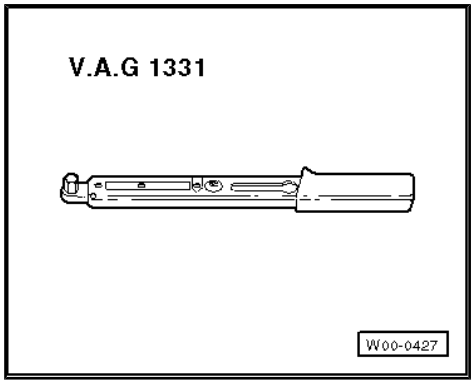

2.1.1 Removing battery

– Disconnect battery ⇒ page 70 .

– The battery heat insulation jacket -arrow- can be opened and removed (if fitted) once the battery positive clamp has been loosened and removed from the battery positive terminal.

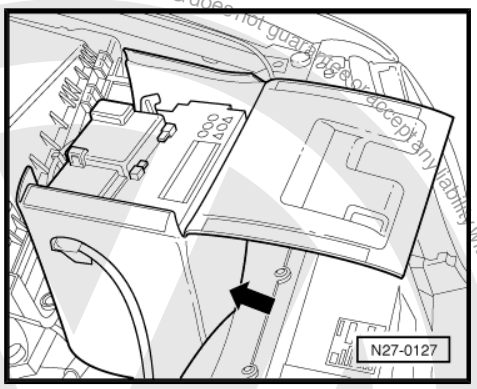

– Remove hexagon bolt M8×25 -arrow-.

– Remove battery clamping bracket.

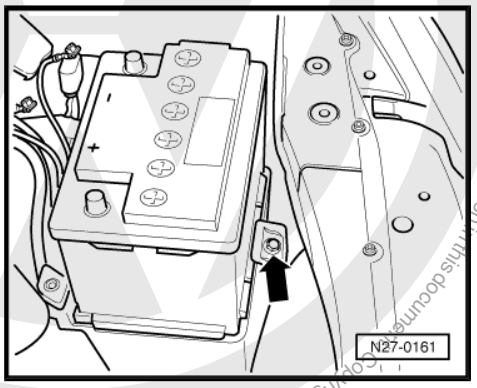

2.1.2 Installing battery

To guarantee the battery seats securely, only install batteries with a 10.5 mm battery foot strip and adhere to the following procedures:

Protected by copyright. Copying for private or commercial purposes, part or in whole, is not permitted unless authorised by Volkswagen AG. Volkswagen AG does not guarantee or accept any liability with respect to the correctness of information in this document. Copyright by Volkswagen AG.
satelettronica

– Install battery so that the lug of the battery carrier -arrow- engages in the battery base strip recess -1-.

It must not be possible to move a battery to the left or to the right.

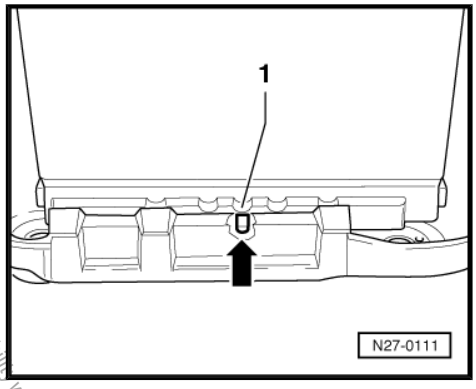

The battery is inserted correctly when the centre cut-out in the battery foot strip aligns with threaded hole in the battery carrier -arrows-.

– On batteries with a hose for central venting ensure that the hose is not pinched. Only then can the battery vent freely.

– Ensure that the opening on the upper side of the battery cover is not blocked on batteries without a hose for central venting.

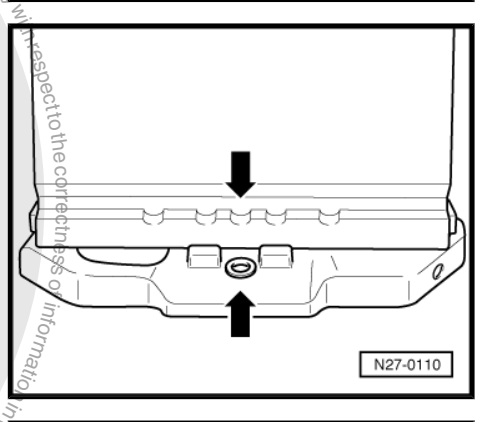

– Install retaining bracket and tighten M8×25 securing bolt -arrow- to 22 Nm.

– If removed reinstall the heat insulation jacket.

– After installing, check that battery is seated securely. A loosely fitted battery creates the following dangers:

♦ Shortened service life due to damage from vibration (danger of explosion).

♦ The plates in the battery cells will be damaged if the battery is not secured correctly.

♦ Damage to battery housing by clamping bracket (possibility of acid leaking, with high consequential costs).

♦ Poor crash safety.

– Connecting battery ⇒ page 70 .

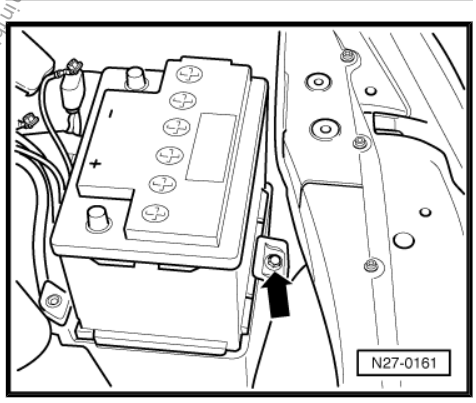

Volkswagen AG. Volkswagen AG does not guarantee or accept any liability with respect to the correctness of information in this document. Copyright by Volkswagen AG. Printed copy copyright protected. Copy or publication not permitted unless authorised by Volkswagen AG. Not for commercial purposes, in part or in whole.
satelettronica

3 Disconnecting and reconnecting batteries

Special tools and workshop equipment required

- Torque wrench -V.A.G 1331-

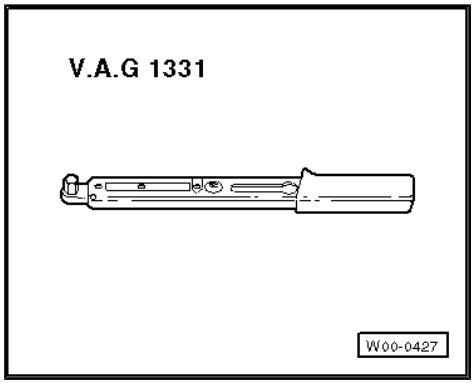

Note

Disconnecting the battery earth cable (open circuit) ensures safety when working on the electrical system. The battery positive wire need only be disconnected for removal of the battery. However, you should observe the notes on disconnecting the battery in any case.

3.1 Disconnecting battery

– Switch off ignition and all electrical consumers and remove ignition key.

– Disconnect battery earth strap on battery negative terminal first.

Note

To disconnect the battery positive cable, first remove the fuse holder on the battery *⇒ page 70* *.*

– Then release the battery positive terminal clamp securing bolt -arrow-.

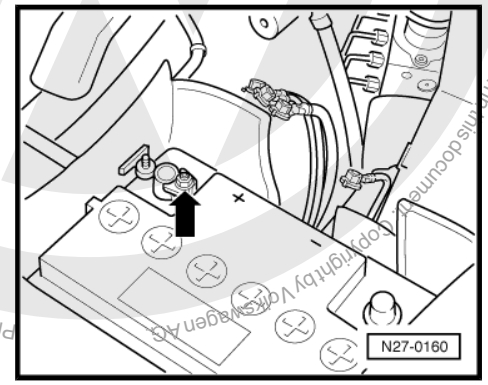

3.2 Fuse holder on battery

– Switch off ignition and all electrical consumers and remove ignition key.

– Disconnect battery earth strap on battery negative terminal first.

Protected by copyright. Copying for private or commercial purposes, in part or in whole, is not permitted unless authorised by Volkswagen AG. Volkswagen AG does not guarantee or accept any liability with respect to the correctness of information in this document. Copyright by Volkswagen AG.
satelettronica

– Press locking lugs -arrows- together to open fuse holder then remove cover.

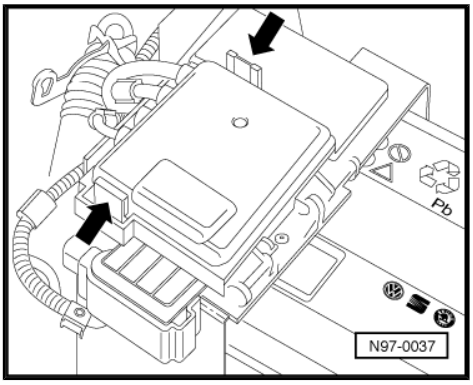

– Unscrew current conductor plate securing nut -1- on positive terminal clamp.

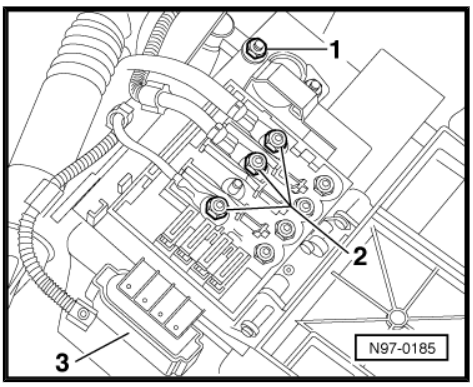

– Remove securing nuts -2- to disconnect wiring to strip fuses.
– Pull off connector -3-.

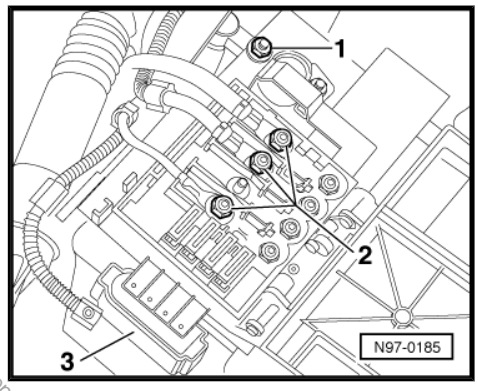

– Release tension on fuse holder spring catch by pressing down with a thumb and lever spring catch locking device off battery using a suitable screwdriver.
– Remove fuse holder upwards off battery.

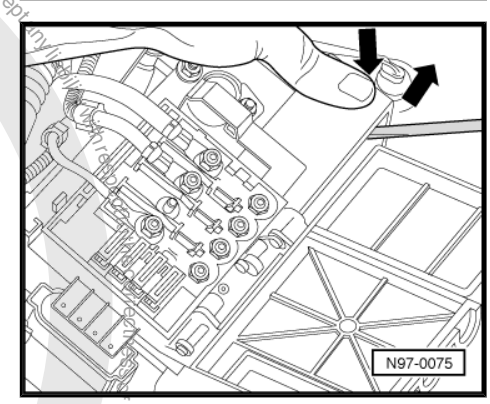

3.3 Connecting battery

Note

- *Battery terminal clamps must be fitted only by hand without force to prevent damage to battery housing.*
- *Battery terminals must not be greased.*

Protected by copyright. Copying for private or commercial purposes, in part or in whole, is not permitted unless authorised by Volkswagen AG. Volkswagen AG does not guarantee or accept any guarantee for the accuracy of the information in this document. Copyright by Volkswagen AG.
satelettronica

– Fit positive cable clamp onto battery positive terminal.
– Tighten battery positive terminal clamp securing bolt -arrow- to 6 Nm.
– Install fuse holder on battery ⇒ page 72 .
– Reconnect negative terminal clamp to battery negative terminal and tighten to 6 Nm.
– Perform steps according to table ⇒ page 72 .

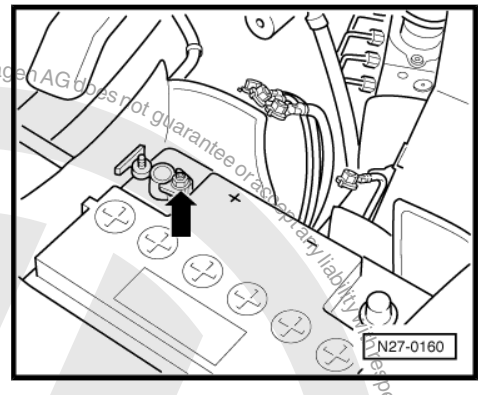

3.4 Installing fuse holder on battery

– Fit fuse holder onto battery, when doing this fit current conductor plate onto securing pins on battery positive terminal.
– Engage fuse holder spring catch in battery.
– Tighten securing bolt to 6 Nm.
– Close heat insulation jacket if necessary.
– Tighten securing nuts -1- and secure current conductor plate on positive (+) terminal clamp to 6 Nm.
– If wiring was disconnected, reconnect again to strip fuses and then tighten securing screws -2- to 6 Nm.

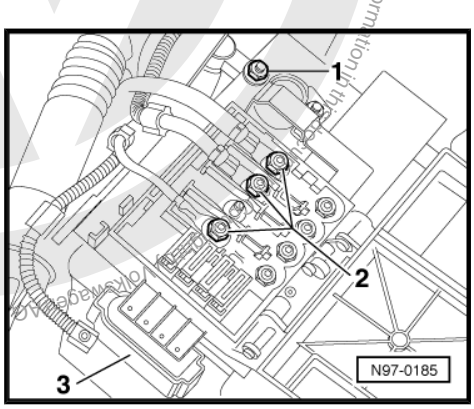

Note

See connecting plan in appropriate current flow diagram . ⇒ Current flow diagrams, Electrical fault finding and Fitting locations

– Reconnect connector -3-.
– Fit fuse holder cover and close.

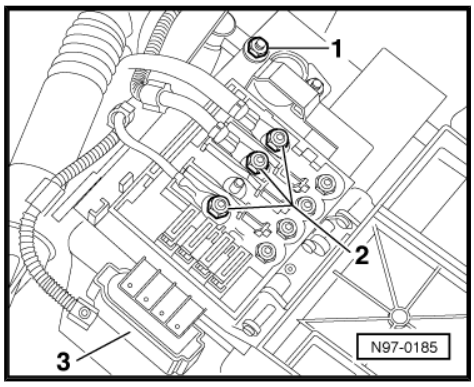

3.5 Steps after connecting battery

Procedure	Performed
Read fault memory: ⇒ Guided fault finding with vehicle diagnosis, testing and information system	
Open all electric windows completely and close again.	
Radio or radio and navigation system: Check function, recode radio if necessary	

Copyright. Copying for private or commercial purposes, in part or in whole, is not permitted unless authorised by Volkswagen AG. Volkswagen AG does not guarantee or accept any liability with respect to the correctness of information in this document.

satelettronica

Procedure	Performed
Clock: Check time setting and reset if necessary	

If necessary, table can be printed out.

Protected by copyright. Copying for private or commercial purposes, in part or in whole, is not permitted unless authorised by Volkswagen AG. Volkswagen AG does not guarantee or accept any liability with respect to the correctness of information in this document. Copyright by Volkswagen AG.
satelettronica

4 Starter

Note

- *To disconnect and connect the battery, the procedure described in the workshop manual should be strictly adhered to* *⇒ page 70*
- *If vehicle has a security-coded radio, obtain anti-theft code before disconnecting battery.*
- *Notes concerning the removal and installation of the starter bush can also be found in ⇒ 5-speed manual gearbox 085; Rep. Gr. 34 .*

4.1 Removing and installing starter (1.4 l petrol engine)

Special tools and workshop equipment required

- Torque wrench -V.A.G 1331-

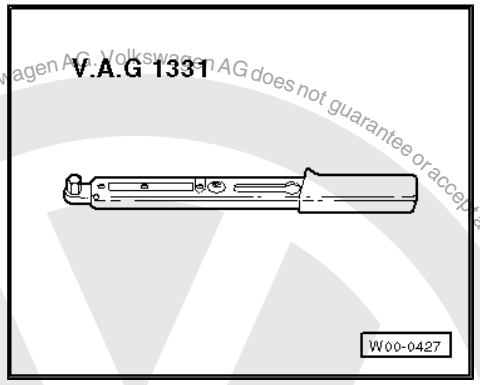

- Torque wrench -V.A.G 1332-

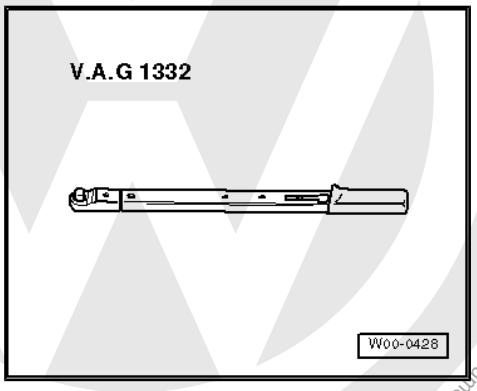

Removing:

– Disconnect battery ⇒ page 70 .

Protected by copyright. Copying for private or commercial purposes, in part or in whole, is not permitted unless authorised by Volkswagen AG. Volkswagen AG does not guarantee or accept any liability with respect to the correctness of information in this document. Copyright by Volkswagen AG.
satelettronica

– Release terminal 50 connector -1- and pull off.

– Remove plastic cap -2- and disconnect wire from solenoid switch terminal 30.

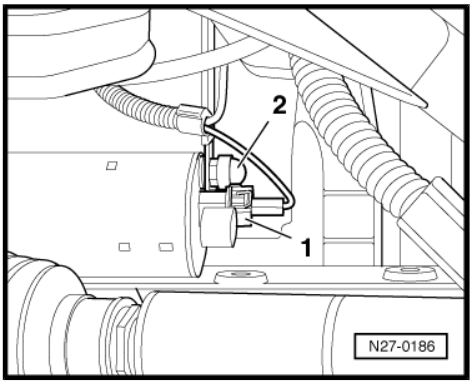

– Remove hexagon bolt -1-.

– Remove hexagon nut -4-.

– Unscrew hexagon bolt -3- and remove bolt -2-.

– Take starter out downwards.

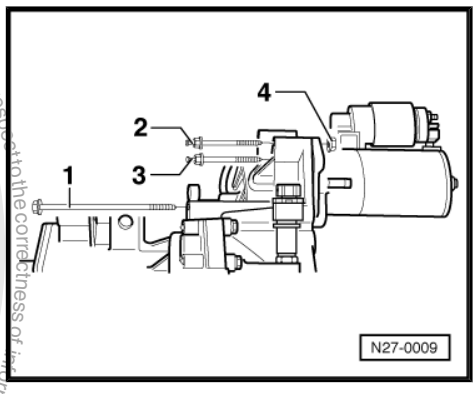

Installing:

Installation is carried out in the reverse order. When installing observe the following:

– Insert starter.

– Insert hexagon bolts -1- and -3- and tighten hand-tight.

– Insert hexagon bolt -2- and tighten hexagon nut -4- hand-tight.

– Tighten hexagon bolts -1- and -2- and hexagon nut -4-.

Prescribed torques: hexagon bolt -1-: 45 Nm, hexagon bolt -3-: 60 Nm, hexagon bolt -4-: 60 Nm.

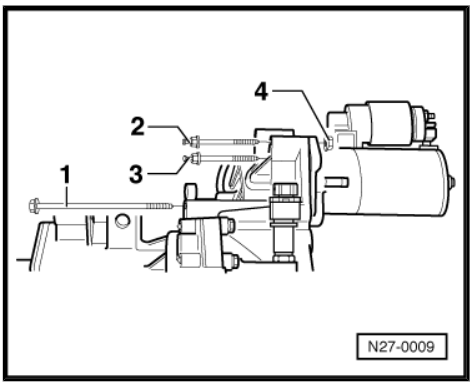

– Reconnect terminal 50 connector -1-.

– Tighten wire terminal on solenoid (terminal 30) to 13 Nm and fit plastic cap -2-.

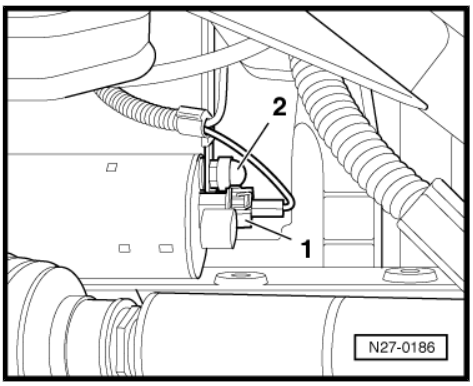

4.2 Removing and installing starter (1.6 l, 1.8 l petrol engines and diesel engines)

Special tools and workshop equipment required

Protected by copyright. Copyright by Volkswagen AG.
Volkswagen AG does not guarantee or accept any liability with respect to the correctness of information in this document. Copyright by Volkswagen AG. Protected by copyright. Copying for private or commercial purposes, in part or in whole, is not permitted unless authorised by Volkswagen AG.
satelettronica

- Torque wrench -V.A.G 1331-

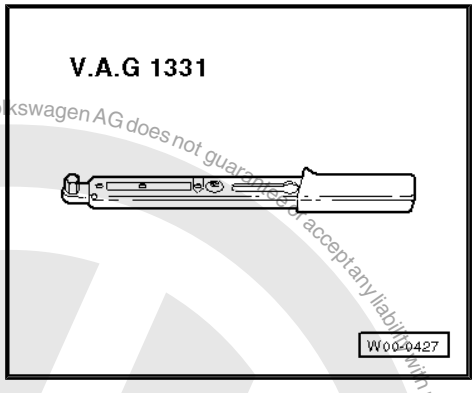

- Torque wrench -V.A.G 1332-

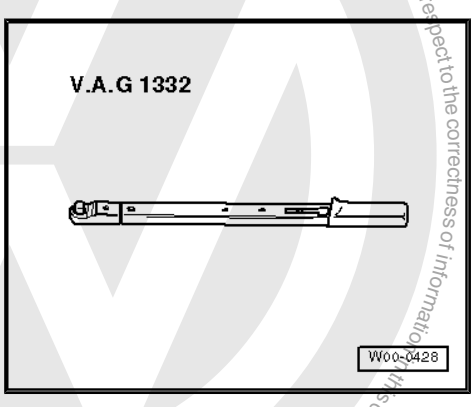

Protected by copyright. Copying for private or commercial purposes, in part or in whole, is not permitted unless authorised by Volkswagen AG. Volkswagen AG does not guarantee or accept any liability with respect to the correctness of information in this document. Copyright by Volkswagen AG.

Removing:

– Disconnect battery ⇒ page 70 .

Note

Before removing the starter on TDI engines, the cables/hoses must be removed from charge air cooler to intake manifold, to turbocharger and from radiator to cylinder head.

– Remove noise insulation tray ⇒ General body repairs, exterior; Rep. Gr. 50 ; Body - front; Assembly overview .
– Disconnect connector -1- and pull out of retainer.
– Release terminal 50 connector -2- and pull off.
– Remove terminal 30 wire -3- on solenoid. When installing tighten nut to 13 Nm.
– Remove wiring from wiring guides.
– Remove wiring guides.

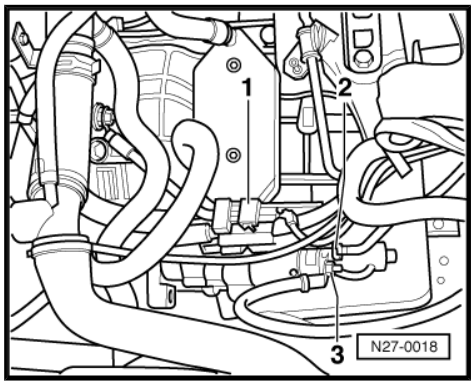

satelettronica

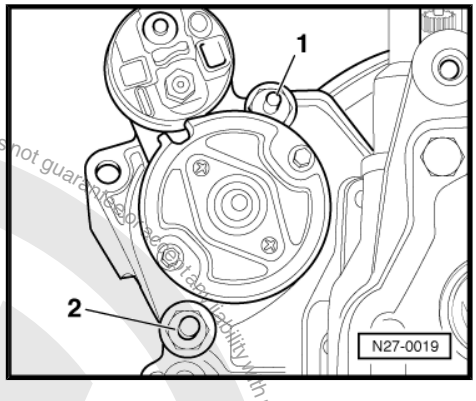

– Remove upper M12×180 mm hexagon bolt -1-. When installing tighten hexagon bolt to 65 Nm.
– Remove lower M12×180 mm hexagon bolt -2-. When installing tighten hexagon bolt to 65 Nm.
– Take starter out downwards.

Installing:

Install in reverse order of removal, observe specified torque settings .

Protected by copyright. Copying for private or commercial purposes, in part or in whole, is not permitted unless authorised by Volkswagen AG. Volkswagen AG does not guarantee or accept any liability with respect to the correctness of information in this document. Copyright by Volkswagen AG.
satelettronica

5 Alternator

Note

- *To disconnect and connect the battery, the procedure described in the workshop manual should be strictly adhered to* *⇒ page 70*
- *If vehicle has a security-coded radio, obtain anti-theft code before disconnecting battery.*
- *Checking alternator: ⇒ Current flow diagrams, Electrical fault finding and Fitting locations.*

Special tools and workshop equipment required

- Torque wrench -V.A.G 1331-

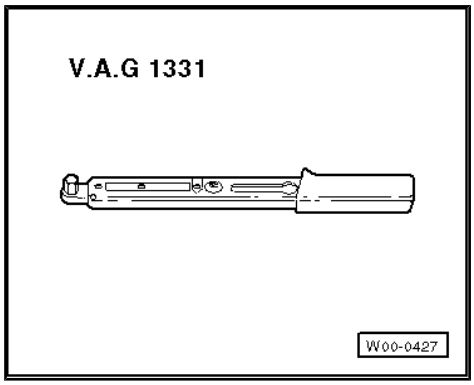

5.1 Assembly overview

5.1.1 4-cylinder 1.4 l fuel injection engine with basic belt drive

Protected by copyright. Copying for private or commercial purposes, in part or in whole, is not permitted unless authorised by Volkswagen AG. Volkswagen AG does not guarantee or accept any liability with respect to the correctness of information in this document. Copyright by Volkswagen AG.

satelettronica

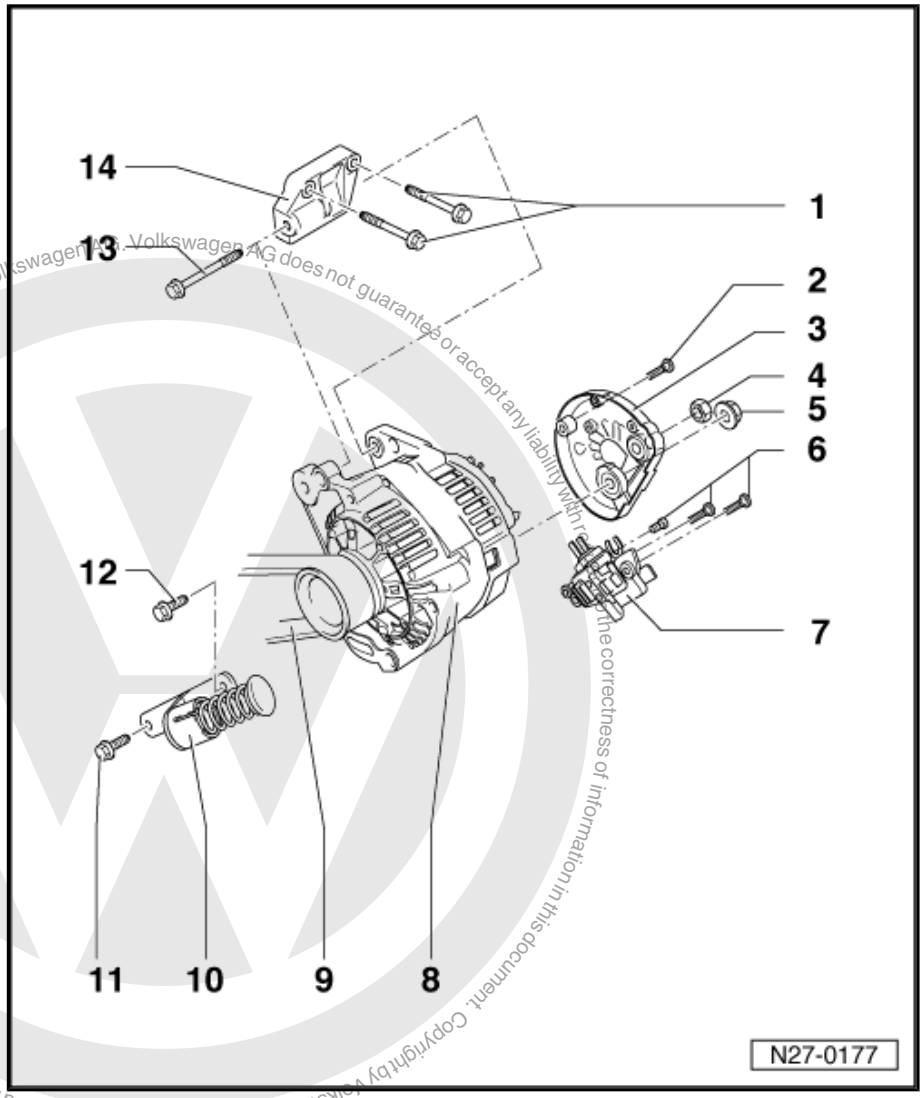

1 - Hexagon bolts
- ❑ M10×50 mm
- ❑ 45 Nm
- ❑ With aluminium block: renew bolts (coated with sealant)

2 - Cross-head screw

3 - Protective cap

4 - Hexagon nut
- ❑ M8

5 - Hexagon nut
- ❑ M8

6 - Cross-head screws

7 - Voltage regulator
- ❑ Checking carbon brushes ⇒ page 94
- ❑ Removing and installing ⇒ page 94

8 - Alternator
- ❑ Prescribed torque for B + wire terminal ⇒ page 93

9 - Poly-V-belt
- ❑ Removing and installing ⇒ page 88
- ❑ Poly-V-belt drive ⇒ page 86

10 - Tensioning arm

11 - Hexagon bolt
- ❑ M8×22 mm
- ❑ 25 Nm
- ❑ With aluminium block: renew bolt (coated with sealant)

12 - Hexagon bolt
- ❑ M8×39 mm
- ❑ 25 Nm

13 - Hexagon bolt
- ❑ M8×85 mm
- ❑ 25 Nm

14 - Bracket

Protected by copyright. Copying for private or commercial purposes, in part or in whole, is not permitted unless authorised by Volkswagen AG. Volkswagen AG does not guarantee or accept any liability with respect to the correctness of information in this document. Copyright by Volkswagen AG.

satelettronica

5.1.2 4-cylinder 1.4 l fuel injection engine with power-assisted steering

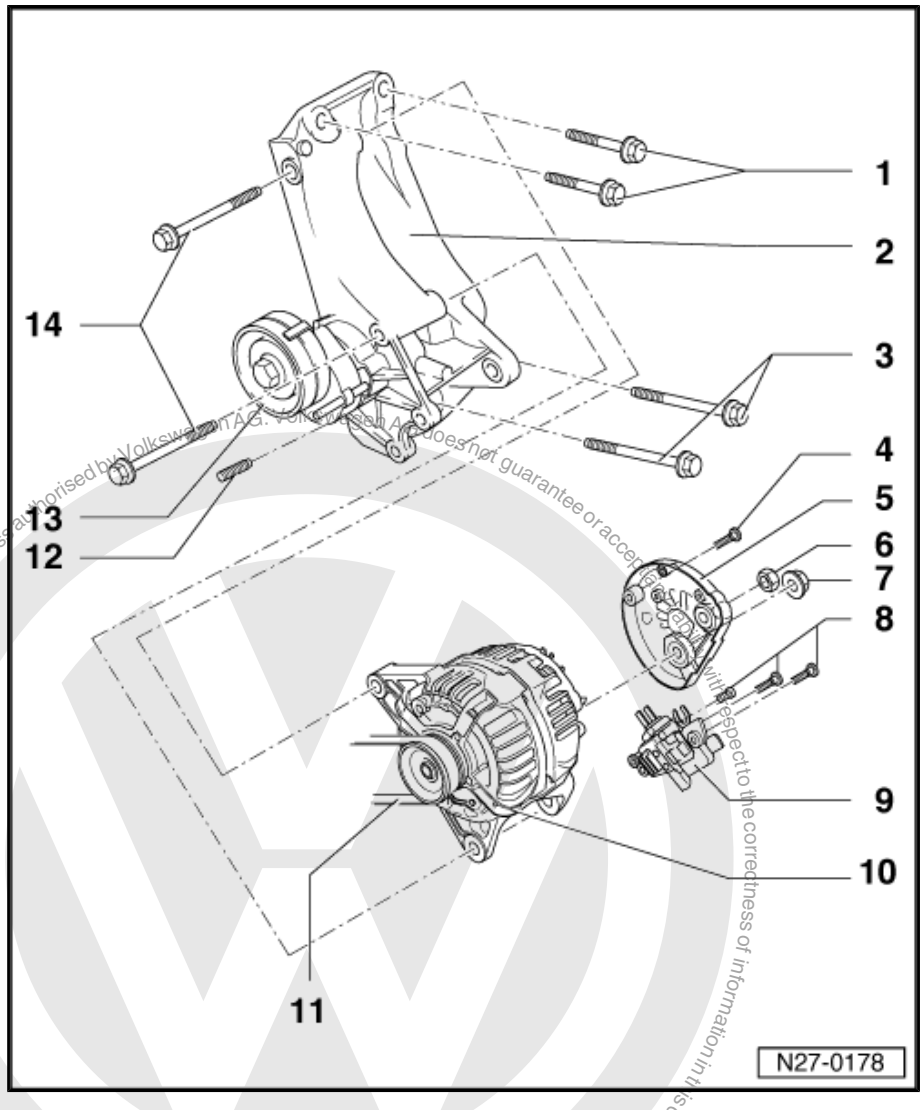

1 - Hexagon bolts
- ❑ M10×55 mm
- ❑ 50 Nm
- ❑ With aluminium block: renew bolts (coated with sealant)
- ❑ Tightening sequence: Upper right bolt first (item 1), then lower right bolt (item 3), and then upper and lower bolts on left (as seen looking forwards)

2 - Bracket

3 - Hexagon bolts
- ❑ M10×100 mm
- ❑ 50 Nm
- ❑ With aluminium block: renew bolts (coated with sealant)
- ❑ Tightening sequence: Upper right bolt first (item 1), then lower right bolt (item 3), and then upper and lower bolts on left (as seen looking forwards)

4 - Cross-head screw

5 - Protective cap

6 - Hexagon nut
- ❑ M8

7 - Hexagon nut
- ❑ M8

8 - Cross-head screws

9 - Voltage regulator
- ❑ Checking carbon brushes ⇒ page 94
- ❑ Removing and installing ⇒ page 94

10 - Alternator
- ❑ Prescribed torque for B+ wire terminal ⇒ page 93

11 - Poly-V-belt
- ❑ Removing and installing ⇒ page 89
- ❑ Poly-V-belt drive ⇒ page 86

12 - M8 sealing screw with hexagon socket head

13 - Tensioning roller

14 - Hexagon bolts
- ❑ M8×85 mm
- ❑ 25 Nm

Protected by copyright. Copying for private or commercial purposes, in part or in whole, is not permitted unless authorised by Volkswagen AG. Volkswagen AG does not guarantee or accept any liability with respect to the correctness of information in this document. Copyright by Volkswagen AG.
satelettronica

5.1.3 4-cylinder 1.4 l fuel injection engine with power assisted steering and air conditioning

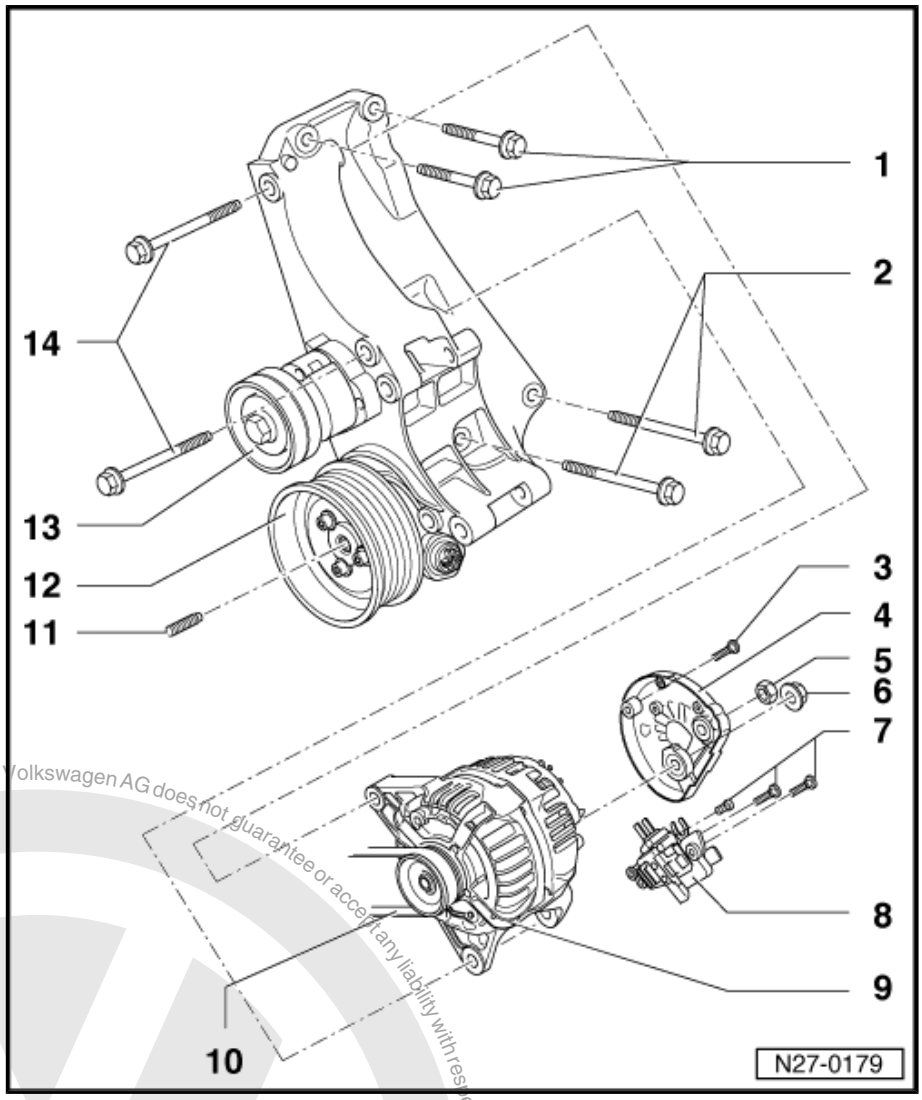

1 - Hexagon bolts
- ❑ M10×50 mm
- ❑ 45 Nm
- ❑ With aluminium block: renew bolts (coated with sealant)
- ❑ Tightening sequence: Upper right bolt first (item 1), then lower right bolt (item 2), and then upper and lower bolts on left (as seen looking forwards)

2 - Hexagon bolts
- ❑ M10×95 mm
- ❑ 45 Nm
- ❑ With aluminium block: renew bolts (coated with sealant)
- ❑ Tightening sequence: Upper right bolt first (item 1), then lower right bolt (item 2), and then upper and lower bolts on left (as seen looking forwards)

3 - Cross-head screw

4 - Protective cap

5 - Hexagon nut
- ❑ M8

6 - Hexagon nut
- ❑ M8

7 - Cross-head screws

8 - Voltage regulator
- ❑ Checking carbon brushes ⇒ page 94
- ❑ Removing and installing ⇒ page 94

9 - Alternator
- ❑ Prescribed torque for B+ wire terminal ⇒ page 93

10 - Poly-V-belt
- ❑ Removing and installing ⇒ page 89
- ❑ Poly-V-belt drive ⇒ page 86

11 - M8 sealing screw with hexagon socket head

12 - Bracket

13 - Tensioning roller

14 - Hexagon bolts
- ❑ M8×85 mm
- ❑ 25 Nm

Protected by copyright. Copying for private or commercial purposes, in part or in whole, is not permitted unless authorised by Volkswagen AG. Volkswagen AG does not guarantee or accept any liability with respect to the correctness of information in this document. Copyright by Volkswagen AG.
satelettronica

5.1.4 4-cylinder 1.6 l and 1.8 l fuel injection engine

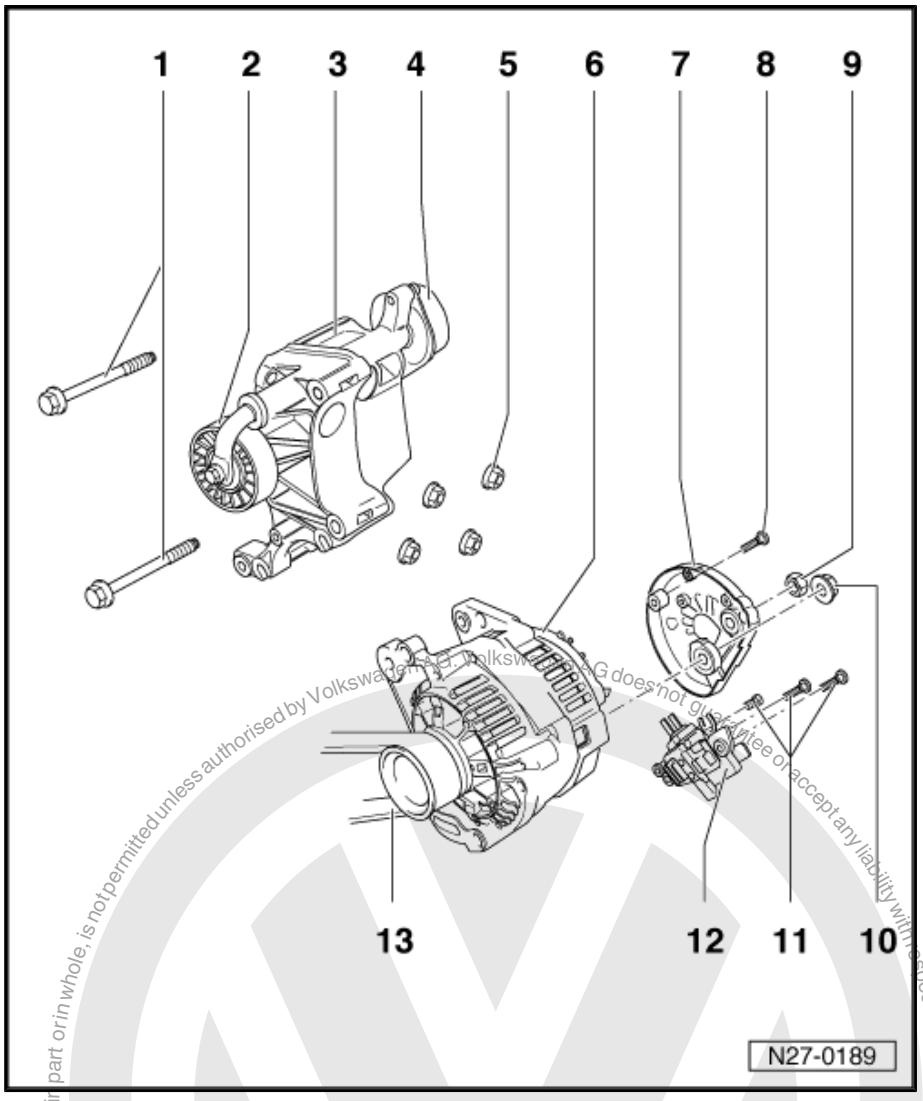

1 - Hexagon bolts
- ❑ M8×85 mm
- ❑ 25 Nm

2 - Tensioning roller

3 - Bracket

4 - Tensioning element for tensioning roller

5 - Hexagon nuts
- ❑ M8
- ❑ 30 Nm

6 - Alternator
- ❑ Prescribed torque for B + wire terminal ⇒ page 93

7 - Protective cap

8 - Cross-head screw

9 - Hexagon nut
- ❑ M8

10 - Hexagon nut
- ❑ M8

11 - Cross-head screws

12 - Voltage regulator
- ❑ Checking carbon brushes ⇒ page 94
- ❑ Removing and installing ⇒ page 94

13 - Poly-V-belt
- ❑ Removing and installing ⇒ page 90
- ❑ Poly-V-belt drive ⇒ page 86

Protected by copyright. Copying for private or commercial purposes, in part or in whole, is not permitted unless authorised by Volkswagen AG. Volkswagen AG does not guarantee or accept any liability with respect to the correctness of information in this document. Copyright by Volkswagen AG.
satelettronica

5.1.5 Diesel engines, except engine codes AGP, AGR, ALH, AQM, ASR

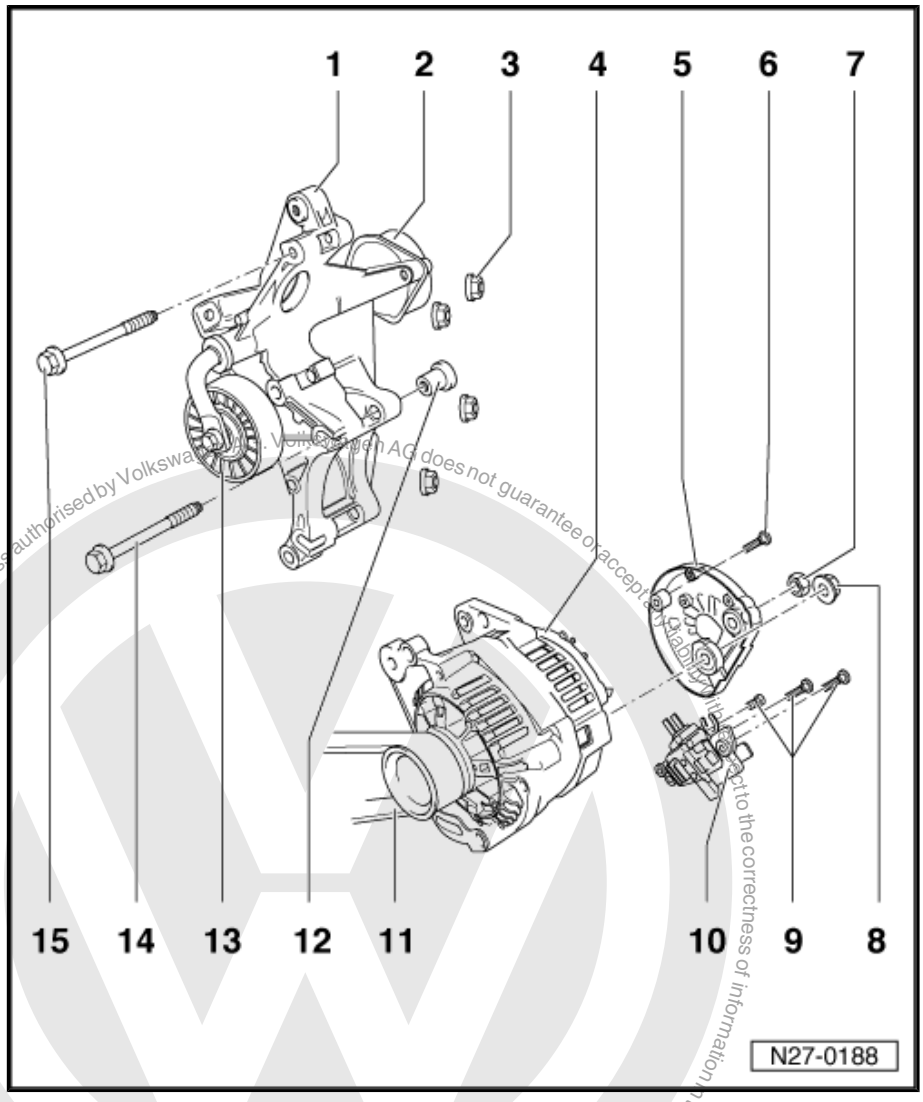

1 - Bracket

2 - Tensioning element for tensioning roller

3 - Hexagon nuts
- ❑ M8
- ❑ 30 Nm

4 - Alternator
- ❑ Prescribed torque for B + wire terminal ⇒ page 93

5 - Protective cap

6 - Cross-head screw

7 - Hexagon nut
- ❑ M8

8 - Hexagon nut
- ❑ M8

9 - Cross-head screws

10 - Voltage regulator
- ❑ Checking carbon brushes ⇒ page 94
- ❑ Removing and installing ⇒ page 94

11 - Poly-V-belt
- ❑ Removing and installing ⇒ page 90
- ❑ Poly-V-belt drive ⇒ page 86

12 - Internally threaded sleeve
- ❑ M8

13 - Tensioning roller

14 - Hexagon bolt
- ❑ M8×85 mm
- ❑ 25 Nm

15 - Hexagon bolt
- ❑ 25 Nm

Protected by copyright. Copying for private or commercial purposes, in part or in whole is not permitted unless authorised by Volkswagen AG. Volkswagen AG does not guarantee or accept any liability with respect to the correctness of information in this document. Copyright by Volkswagen AG.
satelettronica

5.1.6 Diesel engines with power assisted steering, engine codes AGP, AGR, ALH, AQM, ASR

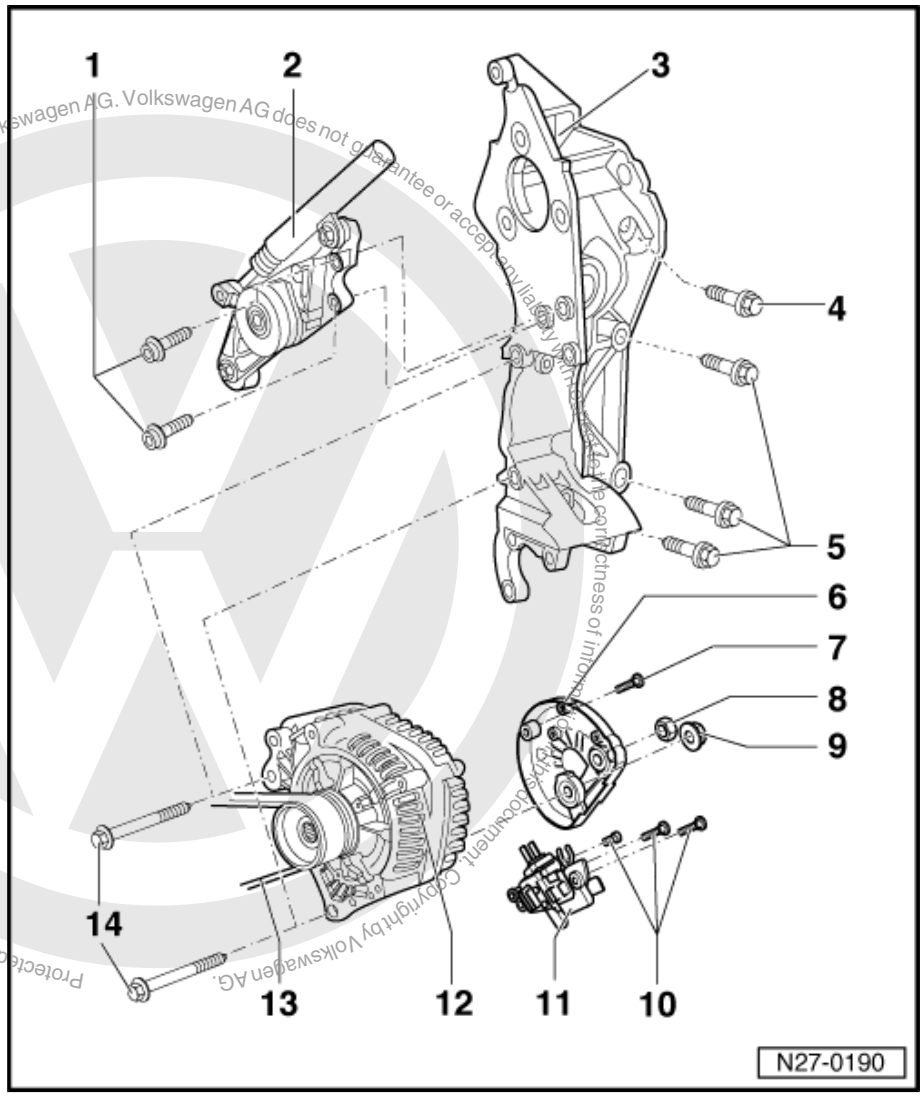

1 - Hexagon bolts
- ❑ M8×45 mm
- ❑ 25 Nm

2 - Tensioning element

3 - Bracket

4 - Hexagon bolt
- ❑ M10×45 mm
- ❑ 45 Nm

5 - Hexagon bolts
- ❑ M10×65 mm
- ❑ 45 Nm

6 - Protective cap

7 - Cross-head screw

8 - Hexagon nut
- ❑ M8

9 - Hexagon nut
- ❑ M8

10 - Cross-head screws

11 - Voltage regulator
- ❑ Checking carbon brushes ⇒ page 94
- ❑ Removing and installing ⇒ page 94

12 - Alternator
- ❑ Prescribed torque for B + wire terminal ⇒ page 93

13 - Poly-V-belt
- ❑ Removing and installing ⇒ page 92
- ❑ Poly-V-belt drive ⇒ page 87

14 - Hexagon bolts
- ❑ M8×85 mm
- ❑ 25 Nm

Protected by copyright. Copying for private or commercial purposes, in part or in whole, is not permitted unless authorised by Volkswagen AG. Volkswagen AG does not guarantee or accept any liability with respect to the correctness of information in this document. Copyright by Volkswagen AG.

satelettronica

5.1.7 Diesel engines with power assisted steering and air conditioner compressor, engine codes AGP, AGR, ALH, AQM, ASR

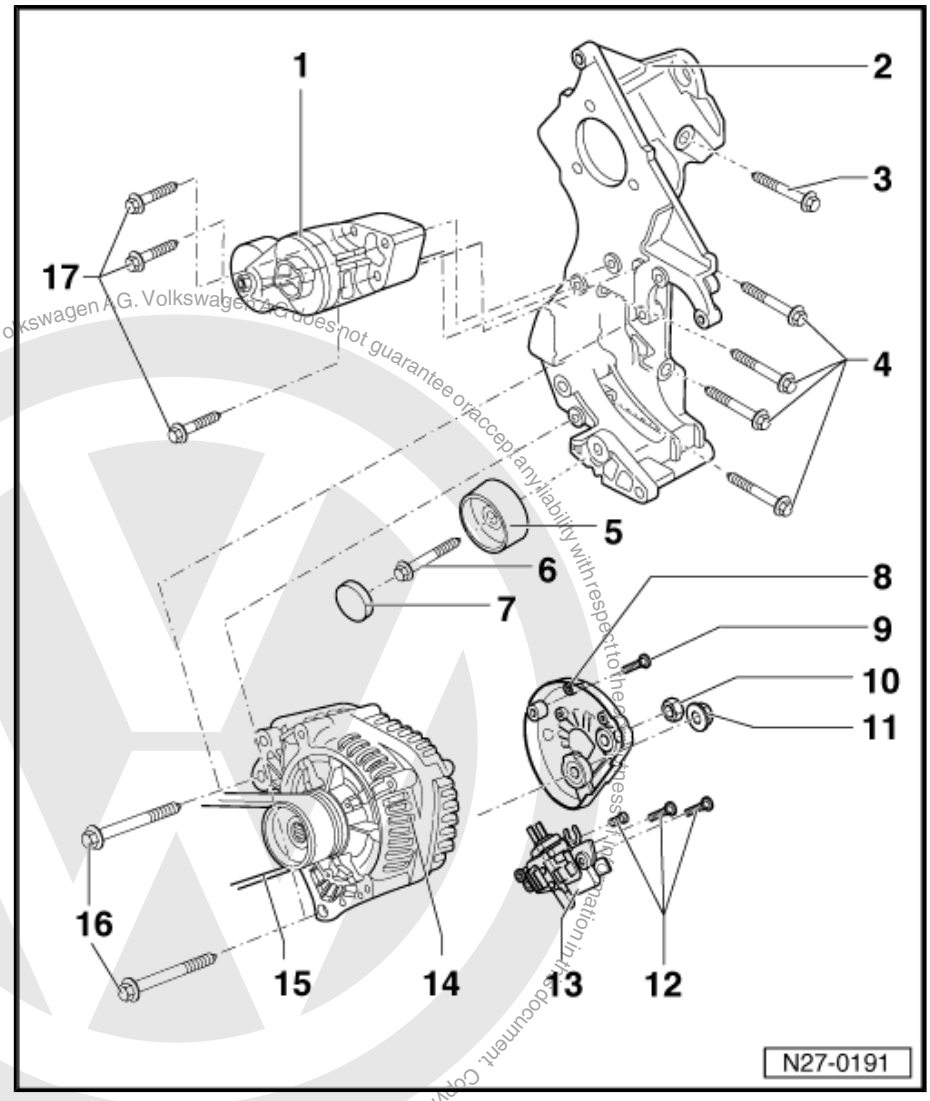

1 - Tensioning roller

2 - Bracket

3 - Hexagon bolt
- ❑ M10×45 mm
- ❑ 45 Nm

4 - Hexagon bolts
- ❑ M10×65 mm
- ❑ 45 Nm

5 - Idler roller

6 - Hexagon bolt
- ❑ M8×50 mm
- ❑ 25 Nm

7 - Idler roller protective cap

8 - Protective cap

9 - Cross-head screw

10 - Hexagon nut
- ❑ M8

11 - Hexagon nut
- ❑ M8

12 - Cross-head screws

13 - Voltage regulator
- ❑ Checking carbon brushes ⇒ page 94
- ❑ Removing and installing ⇒ page 94

14 - Alternator
- ❑ Prescribed torque for B + wire terminal ⇒ page 93

15 - Poly-V-belt
- ❑ Removing and installing ⇒ page 92
- ❑ Poly-V-belt drive ⇒ page 87

16 - Hexagon bolts
- ❑ M8×85 mm
- ❑ 25 Nm

17 - Hexagon bolts
- ❑ M8×45 mm
- ❑ 25 Nm

Protected by copyright. Copying for private or commercial purposes, in part or in whole, is not permitted unless authorised by Volkswagen AG. Volkswagen AG does not guarantee or accept any liability with respect to the correctness of information in this document. Copyright by Volkswagen AG.
satelettronica

5.2 Poly-V-belt drives

4-cylinder 1.4 l fuel injection engine with basic belt drive

1 - Crankshaft/vibration damper/belt pulley

2 - Poly-V-belt - crankshaft/vibration damper and alternator

3 - Belt pulley - alternator

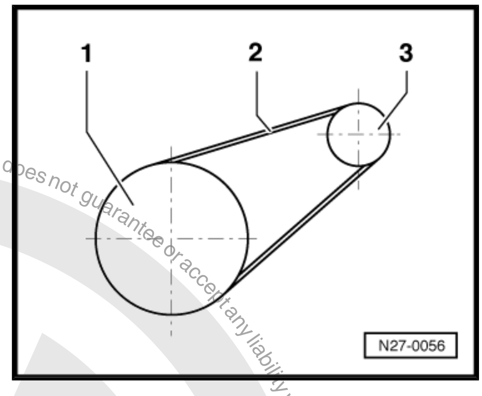

4-cylinder 1.4 l fuel injection engine with power assisted steering vane pump

1 - Crankshaft/vibration damper/belt pulley

2 - Poly-V-belt - crankshaft/vibration damper, tensioning roller, alternator and power steering vane pump

3 - Belt pulley - power steering vane pump

4 - Belt pulley - alternator

5 - Tensioning roller

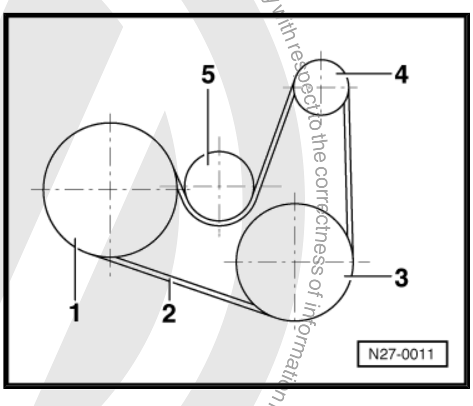

4-cylinder fuel injection engine with air conditioner compressor and power assisted steering vane pump

1 - Crankshaft/vibration damper/belt pulley

2 - Tensioning roller

3 - Belt pulley - alternator

4 - Belt pulley - air conditioner compressor

5 - Belt pulley - power steering vane pump

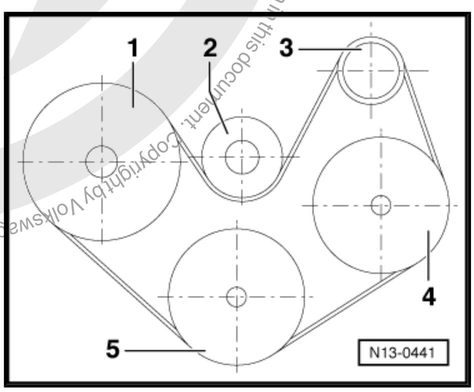

4-cylinder 1.6 l and 1.8 l fuel injection engines and diesel engines with power assisted steering vane pump, except engine codes AGP, AGR, ALH, AQM, ASR

1 - Belt pulley - alternator

2 - Poly V- belt - alternator, cooling system pump, crankshaft and tensioning roller

3 - Belt pulley - cooling system pump

4 - V-belt - crankshaft and power steering vane pump

5 - Belt pulley - power steering vane pump

6 - Crankshaft/vibration damper/belt pulley

7 - Tensioning roller

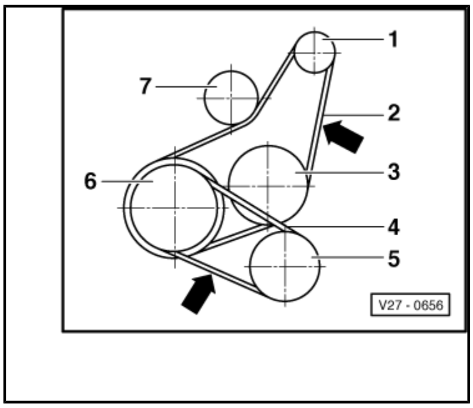

Protected by copyright. Copying for private or commercial purposes, in part or in whole, is not permitted unless authorised by Volkswagen AG. Volkswagen AG does not guarantee or accept any liability with respect to the correctness of information in this document. Copyright by Volkswagen AG.

sateletronica

4-cylinder 1.6 l and 1.8 l fuel injection engines and diesel engines with power assisted steering vane pump and air conditioner compressor except engine codes AGP, AGR, ALH, AQM, ASR

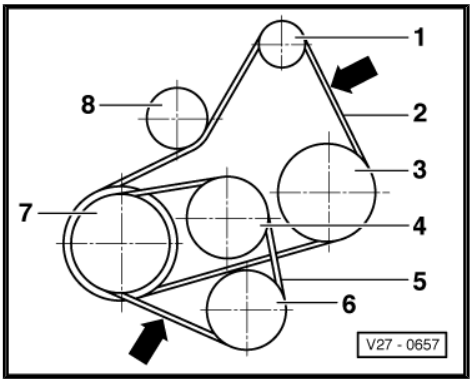

1 - Belt pulley - alternator

2 - Poly-V-belt - alternator, crankshaft, air conditioner compressor and tensioning roller

3 - Belt pulley - air conditioner compressor

4 - Belt pulley - cooling system pump

5 - V-belt - crankshaft, power steering vane pump and cooling system pump

6 - Belt pulley - power steering vane pump

7 - Belt pulley - crankshaft

8 - Tensioning roller

Diesel engines with power assisted steering vane pump, engine codes AGP, AGR, ALH, AQM, ASR

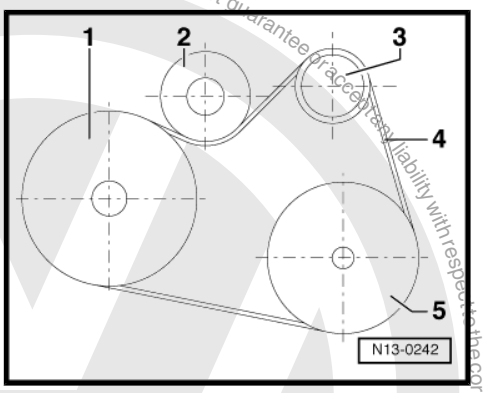

1 - Crankshaft/vibration damper/belt pulley

2 - Tensioning roller

3 - Belt pulley - alternator

4 - Poly-V-belt - crankshaft/vibration damper, tensioning roller, alternator and power steering vane pump

5 - Belt pulley - power steering vane pump

Diesel engines with power assisted steering vane pump and air conditioner compressor, engine codes AGP, AGR, ALH, AQM, ASR

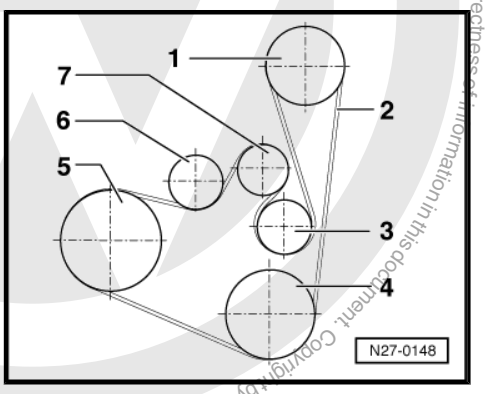

1 - Belt pulley - power steering vane pump

2 - Poly-V-belt - power steering vane pump, idler roller, air conditioner compressor, crankshaft/vibration damper, tensioning roller and alternator

3 - Idler roller

4 - Belt pulley - air conditioner compressor

5 - Crankshaft/vibration damper/belt pulley

6 - Tensioning roller

7 - Belt pulley - alternator

5.3 Checking V-belt

– Check for:

- Sub-surface cracks (cracks, core ruptures, cross sectional breaks)
- Layer separation (top layer, cord strands)
- Base break-up
- Fraying of cord strands
- Flank wear (material wear, frayed flanks, flank brittleness - glassy flanks-, surface cracks)
- Traces of oil and grease

Protected by copyright. Copying for private or commercial purposes, in part or whole, is not permitted unless authorised by Volkswagen AG. Volkswagen AG does not guarantee or accept any liability with respect to the correctness of information in this document. Copyright by Volkswagen AG.
satelettronica

Protected by copyright. Copying for private or commercial purposes, in part or in whole, is not permitted unless authorised by Volkswagen AG. Volkswagen AG does not guarantee or accept any liability with respect to the correctness of information in this document. Copyright by Volkswagen AG.

Note

- *Mark direction of rotation before removing the V-belt. Ensure rotation of direction is correct when installing. If the belt is installed against direction of rotation, the belt will be destroyed!*
- *If damage is established, replace V-belt immediately to prevent failure or functional faults!*

5.4 Checking poly-V-belt

Note

It is essential to renew the poly-V-belt if a fault is found. This will avoid possible breakdowns or malfunctions.

– Crank engine by hand and check poly-V-belt for:

- Sub-surface cracks (cracks, core ruptures, cross sectional breaks)
- Layer separation (top layer, cord strands)
- Base break-up
- Fraying of cord strands
- Flank wear (material wear, frayed flanks, flank brittleness - glassy flanks-, surface cracks)

5.5 Removing and installing poly-V-belt

Note

- *If the used poly-V-belt is to be reinstalled then mark the direction of rotation before removing the belt. When reinstalling, ensure the belt is installed in the correct direction of rotation. Installing the poly-V-belt opposite to the direction of rotation will destroy the belt!*
- *It is not necessary to adjust the poly-V-belt tension, as a spring loaded tensioner guarantees the best possible belt tension.*

5.5.1 4-cylinder 1.4 l fuel injection engine with basic belt drive

Special tools and workshop equipment required

- Torque wrench -V.A.G 1331-

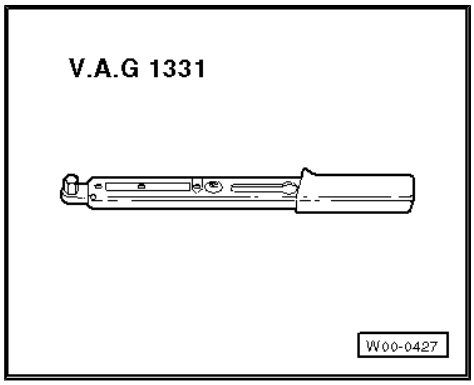

satelettronica

Volkswagen AG does not guarantee or accept any liability with respect to the correctness of information in this document. Copyright by Volkswagen AG. Permission required for any other use. Reproduction, in whole or in part, is not permitted unless authorised by Volkswagen AG. Copyright by Volkswagen AG.

- Tensioning arm -3297-

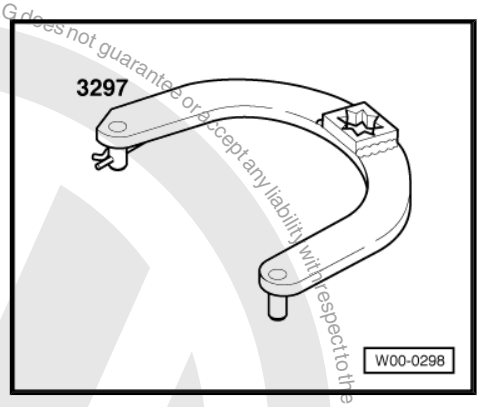

Removing:

– Mark direction of rotation of poly-V-belt if it is to be reused.
– Loosen alternator securing bolts at least one turn.
– Fit tensioning lever -3297- , secure with pin -arrow- and pivot alternator downwards (use e.g. torque wrench -V.A.G 1331- to operate tensioning lever -3297-).
– Remove poly-V-belt.

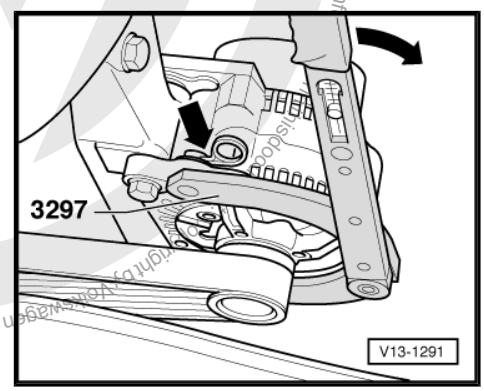

Installing:

Note

- *When fitting used poly-V-belts observe the direction of rotation marked on removal!*
- *When fitting belt, ensure that poly-V-belt seats correctly in pulleys!*

– Fit poly-V-belt on all belt pulleys. Alternator belt pulley remains free.
– Lower alternator with tensioning lever -3297- and place poly-V-belt on alternator pulley.
– Push alternator down at least 3 times onto stop with tensioning lever -3297- to ensure the alternator moves freely.
– After fitting poly-V-belt, and with alternator loose, rotate engine several times (approx. 10 revolutions of engine), to do this operate starter briefly, but do not start engine.

Note

When tightening keep to the sequence given, do not use the alternator for support and do not touch poly-V-belt.

– Tighten alternator lower securing bolt first and then upper securing bolt to 25 Nm.
– Start engine and check belt running.

5.5.2 4-cylinder 1.4 l fuel injection engine with power assisted steering and air conditioner compressor

Removing:

– Remove guard for poly-V-belt

satelettronica

– Mark direction of rotation of poly-V-belt if it is to be reused.

– Using a spanner on the securing bolt, swivel tensioning roller in direction of arrow.

– Remove poly-V-belt.

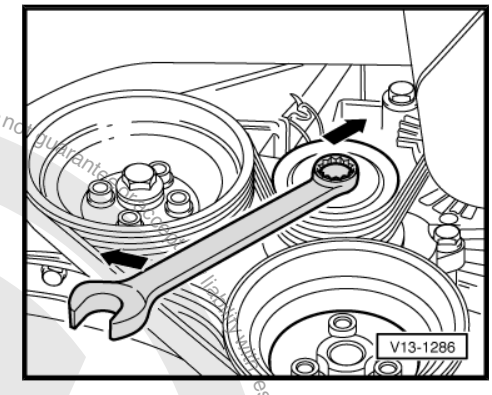

Installing:

Note

- *When fitting used poly-V-belts observe the direction of rotation marked on removal!*
- *Before installing poly-V-belt, ensure that all ancillaries (alternator, air conditioner compressor, power assisted steering vane pump) are secured tightly.*
- *When fitting belt, ensure that poly-V-belt seats correctly in pulleys!*

– Using a spanner on the securing bolt, swivel tensioning roller in direction of arrow.

– Place poly-V-belt onto crankshaft/vibration damper pulley first. Fit belt onto tensioning roller last.

– Start engine and check belt running.

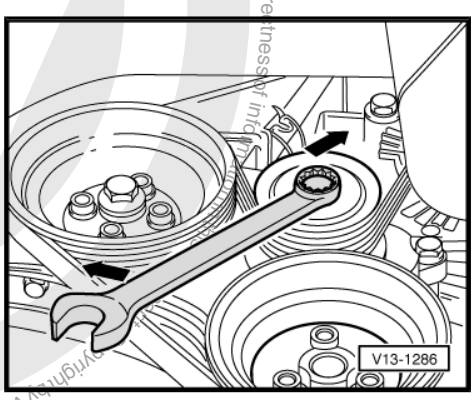

5.5.3 1.6 l and 1.8 l fuel injection engines and diesel engines except engine codes AGP, AGR, ALH, AQM, ASR

Special tools and workshop equipment required

- Lever for poly-V-belt -3299-

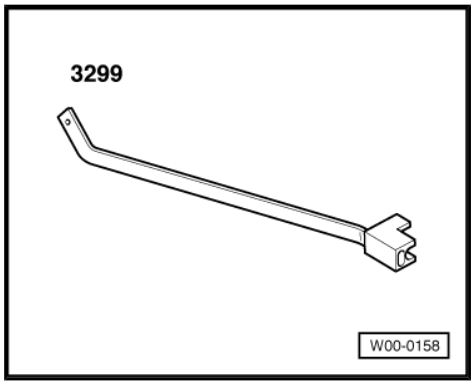

Removing:

– Mark direction of rotation of poly-V-belt if it is to be reused.

satelettronica

– Lift tensioning roller with poly-V-belt lever -3299- and remove poly-V-belt from alternator belt pulley.

– Remove V-belt for power steering vane pump ⇒ Running gear, axles, steering; Rep. Gr. 48 ; Assembly overview - hydraulic lines, reservoirs .

– Remove poly-V-belt.

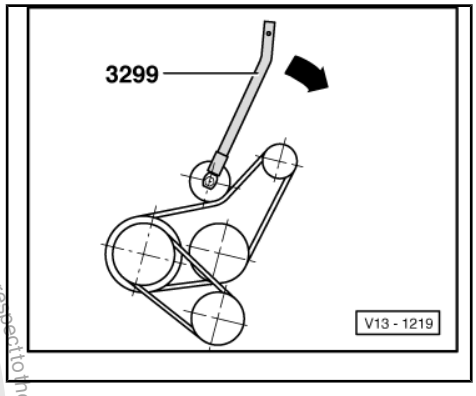

Installing belt drive with no air conditioner compressor:

Note

- *When fitting used poly-V-belts observe the direction of rotation marked on removal!*
- *When fitting belt, ensure that poly-V-belt seats correctly in pulleys!*

– Fit poly-V-belt to crankshaft pulley/vibration damper and coolant pump pulley.

– Lift tensioning roller with poly-V-belt lever -3299- and fit poly-V-belt onto alternator belt pulley.

– Lower tensioning roller onto poly-V-belt with poly-V-belt lever -3299- .

– Install V-belt for power steering vane pump ⇒ Running gear, axles, steering; Rep. Gr. 48 ; Assembly overview - hydraulic lines, reservoirs .

– Start engine and check belt running.

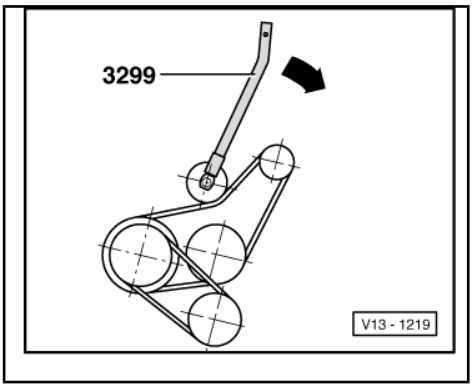

Installing belt drive with air conditioner compressor:

Note

- *When fitting used poly-V-belts observe the direction of rotation marked on removal!*
- *When fitting belt, ensure that poly-V-belt seats correctly in pulleys!*

– Fit poly-V-belt to crankshaft pulley/vibration damper and compressor pulley.

– Lift tensioning roller with poly-V-belt lever -3299- and fit poly-V-belt onto alternator belt pulley.

– Lower tensioning roller onto poly-V-belt with poly-V-belt lever -3299- .

– Install V-belt for cooling system pump and power steering vane pump ⇒ Running gear, axles, steering; Rep. Gr. 48 ; Assembly overview - hydraulic lines, reservoirs .

– Start engine and check belt running.

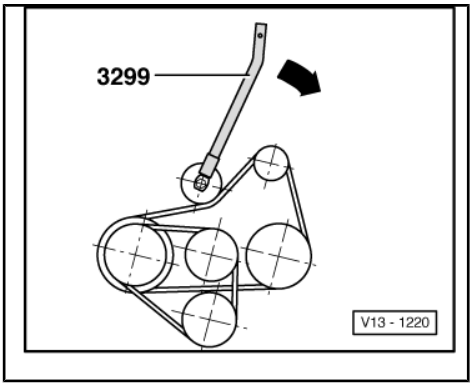

satelettronica

5.5.4 Diesel engines with power assisted steering vane pump and air conditioner compressor, engine codes AGP, AGR, ALH, AQM, ASR

Removing:

– Lever off cover caps -arrows- in engine cover -A- with a screwdriver.

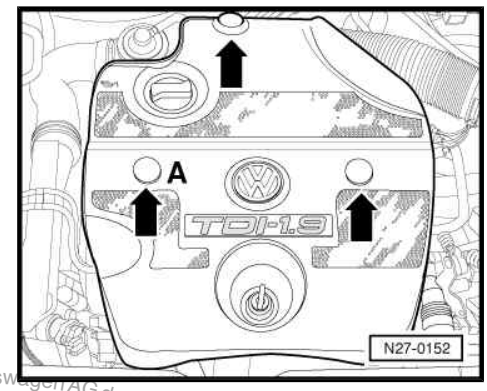

– Remove securing nuts -arrows-.

– Take engine cover -A- off upwards.

– Remove charge air pipe between charge air cooler and turbocharger ⇒ 4-cylinder diesel engine, mechanics; Rep. Gr. 21 ; Charge air system with turbocharger; Removing and installing turbocharger with attachments.

– Mark direction of rotation of poly-V-belt if it is to be reused.

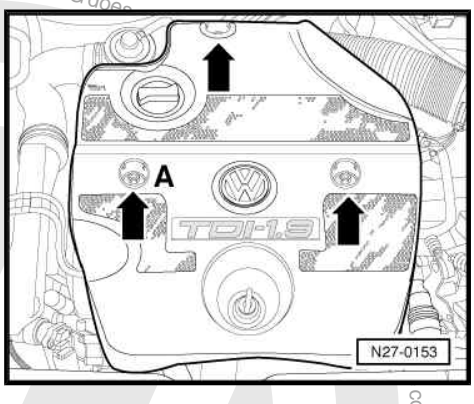

– Swing tensioning roller in -direction of arrow- using 16 mm open jaw spanner on tensioning lever.

– Remove poly-V-belt.

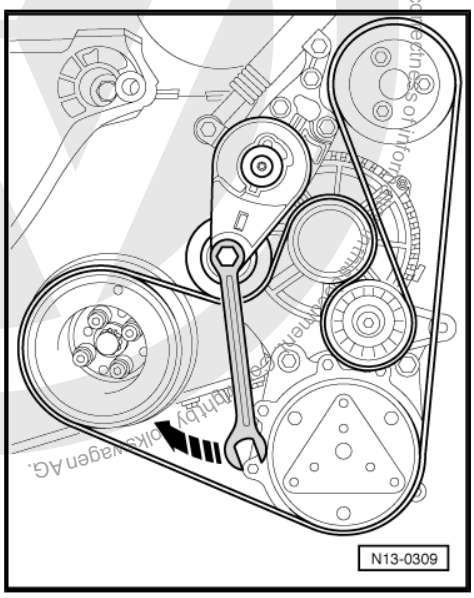

Note

Take poly-V-belt off idler roller first.

Installing:

Note

- *When installing used poly-V-belts observe the direction of rotation marked on removal!*
- *Before installing poly-V-belt, ensure that all ancillaries (alternator, air conditioner compressor, power assisted steering vane pump) are secured tightly.*
- *Vehicles with an air conditioning system: first remove poly-V-belt from idler roller and fit onto idler roller last when installing.*
- *When fitting belt, ensure that poly-V-belt seats correctly in pulleys!*

Protected by copyright. Copying for private or commercial purposes, in part or in whole, is not permitted unless authorised by Volkswagen AG. Volkswagen AG does not guarantee or assume any liability with respect to the correctness of information.
satelettronica

– Swing tensioning roller in -direction of arrow- using 16 mm open jaw spanner on tensioning lever.
– Fit poly-V-belt.
– Install charge air pipe.
– Start engine and check belt running.
– Fit engine cover.
– Install centre and right-hand covers for noise insulation.

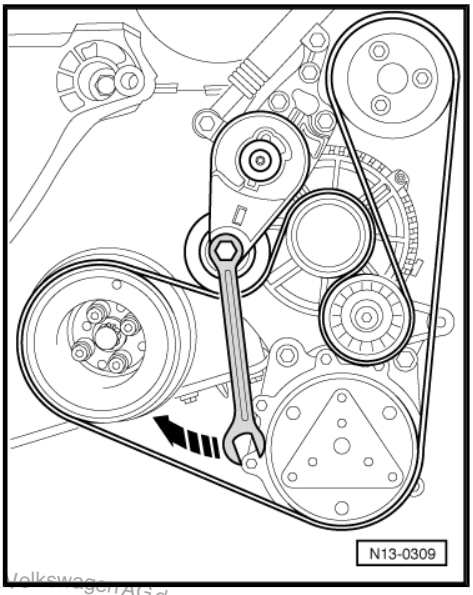

5.6 Compact alternator with poly-V-belt drive

5.6.1 Securing B+ (battery positive) wire to alternator

The threaded connection for the positive wire terminal is designated B1+ on compact alternator!

If the B1+ wire is not tightened to the specified torque setting, the following may occur:

Note

- *The battery will not be charged fully.*
- *Vehicle electrics or electronics fail completely (breakdown).*
- *Danger of fires from sparks.*
- *Damage to electronic components and control units due to excessive voltage.*

The torque setting for the securing nut of B1+ wire -arrow- is 15 Nm.

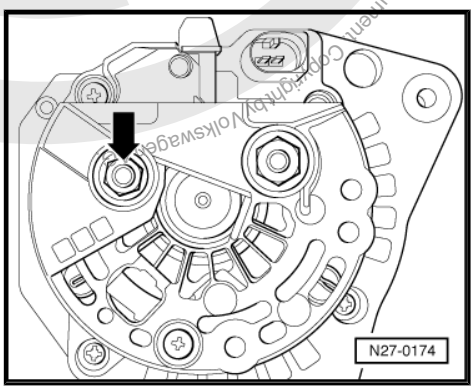

Protected by copyright. Copying for private or commercial purposes, in part or in whole, is not permitted unless authorised by Volkswagen AG. Volkswagen AG does not guarantee or accept any liability with respect to the correctness of information in this document. Copyright by Volkswagen AG
satelettronica

Protected by copyright. Copying for private or commercial purposes, in part or in whole, is not permitted unless authorised by Volkswagen AG. Volkswagen AG does not guarantee or accept any liability with respect to the correctness of information in this document.

5.7 Checking alternator carbon brushes

Length of new carbon brushes = 12 mm

Wear limit = 5 mm

Carbon brush tolerance to one another = 1 mm.

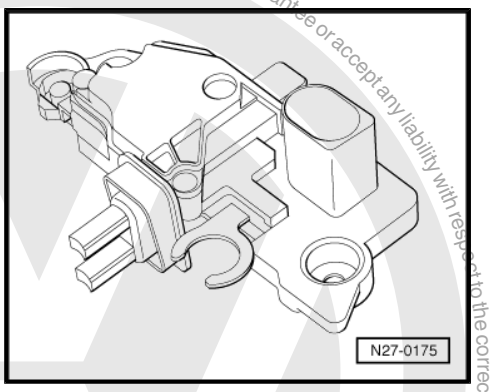

5.8 Removing and installing voltage regulator for alternator

Removing:

– Unscrew securing nuts -arrows A- and remove securing bolt -arrow B- for protective cap and remove protective cap.

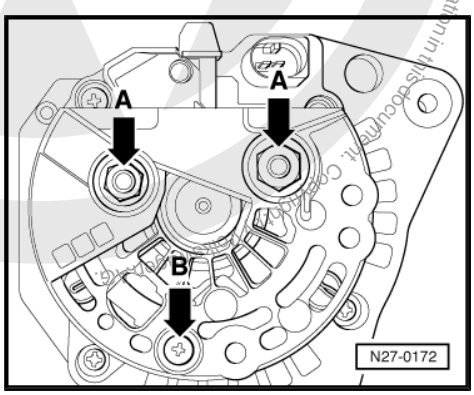

– Remove voltage regulator securing screws -arrows- and remove voltage regulator.

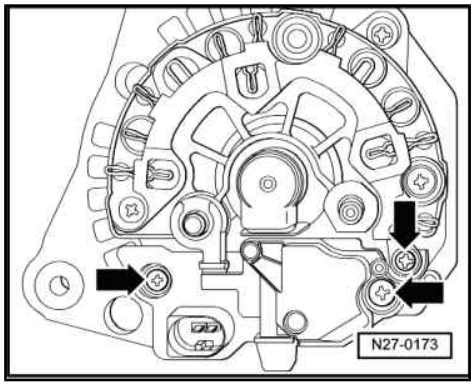

Installing:

Installation is carried out in the reverse sequence.

5.9 Installing poly-V-belt pulley with freewheel

Special tools and workshop equipment required

satelettronica

♦ Torque wrench -V.A.G 1332-

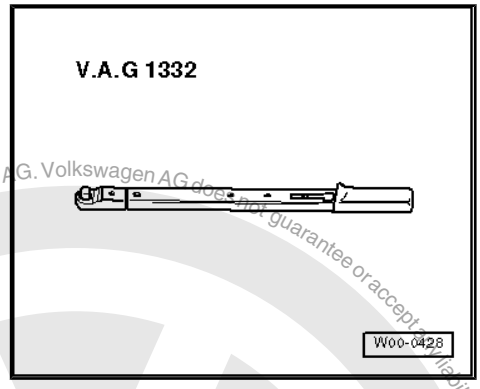

♦ Adapter -3400-

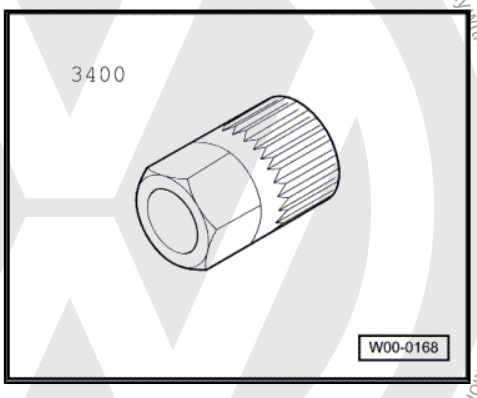

– First remove installed poly-V-belt pulley.
– Insert adapter -3400- in freewheel pulley.
– First screw freewheel pulley by hand onto alternator drive shaft to stop.

Before installing freewheel pulley, set up torque wrench as follows:

– Release socket drive -1- and pull off grip -2-.
– Turn torque wrench grip -2- 180° and reinsert socket drive.
– Set turning direction of torque wrench to anti-clockwise at socket drive.
– Set torque wrench setting to 80 Nm.
– Fit 6 mm key into alternator drive shaft.

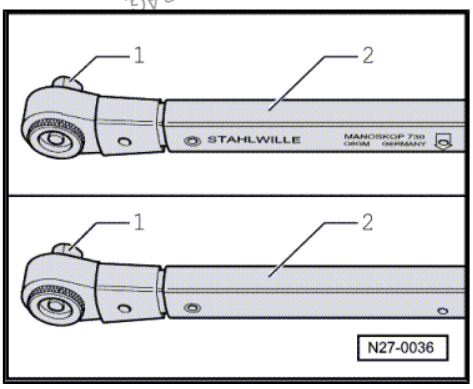

Protected by copyright. Copying for private or commercial purposes, in part or in whole, is not permitted unless authorised by Volkswagen AG. Volkswagen AG does not guarantee or accept any liability with respect to the correctness of information in this document. Copyright by Volkswagen AG.
satelettronica

– Counterhold adapter -3400- with 17 mm ring spanner and tighten freewheel disc to 80 Nm by turning alternator drive shaft anti-clockwise with torque wrench.
– Clip protective cap onto freewheel pulley.

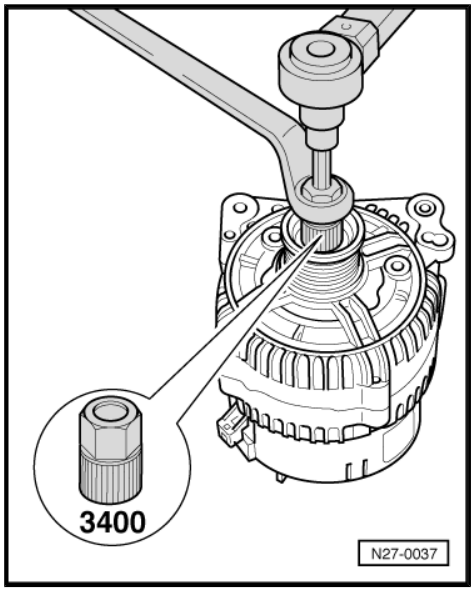

Protected by copyright. Copying for private or commercial purposes, in part or in whole, is not permitted unless authorised by Volkswagen AG. Volkswagen AG does not guarantee or accept any liability with respect to the correctness of information in this document. Copyright by Volkswagen AG.

satelettronica

90 – Gauges, instruments

1 Dash panel insert

Fault detection and fault display

The dash panel insert is equipped with self-diagnosis, which makes fault finding easier.

Performing self-diagnosis of dash panel insert ⇒ page 21 .

1.1 Renewing dash panel insert

Note

If replacing dash panel insert: first read the values for service interval display and odometer before removing the dash panel insert.

– Read service interval display and distance recorder values and note ⇒ page 37 .

– Install new dash panel insert ⇒ page 97 .

– Adapt service interval display data and distance recorder data ⇒ page 37 .

1.2 Removing and installing dash panel insert

Removing:

Note

♦ *If dash panel insert is to be renewed* *⇒ page 97* *.*

♦ *The steering wheel must be removed to remove the dash panel insert.*

– Remove steering wheel ⇒ General body repairs, interior; Rep. Gr. 69 ; Airbag; Removing and installing steering wheel 10.99 ➤ .

– Remove dash panel insert hood.

– Remove bolt -1-.

– Unclip upper part of dash panel insert hood -2- in -direction of arrow-.

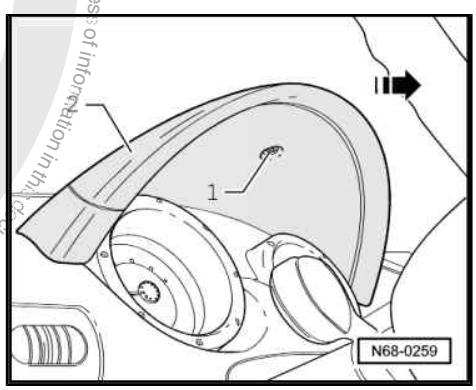

Protected by copyright. Copying for private or commercial purposes, in part or in whole, is not permitted unless authorised by Volkswagen AG. Volkswagen AG does not guarantee or accept any liability with respect to the correctness of information in this document. Copyright by Volkswagen AG.
satelettronica

– The three screws -arrows- must be removed in order to remove the lower part of the dash panel insert hood -1-.

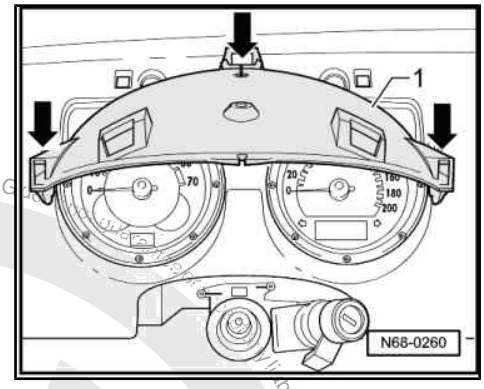

– Now the two screws -arrows- securing the dash panel insert can be removed.
– Pull off connectors on dash panel insert.
– Take out dash panel insert.

Installing:

Install in reverse order of removal.

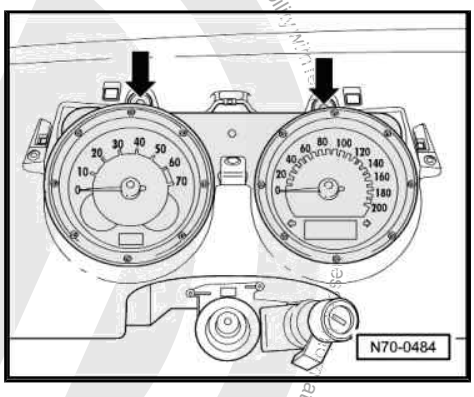

1.3 Description of back of dash panel insert

Note

The dash panel insert must not be dismantled.

Protected by copyright. Copying for private or commercial purposes, in part or in whole, is not permitted unless authorised by Volkswagen AG. Volkswagen AG
Copyright by Volkswagen AG.
satelettronica

1 - 32-pin connector -T32-

- ❑ Blue
- ❑ Pin assignment ⇒ page 100

2 - Warning buzzer

- ❑ Oil pressure warning
- ❑ Lights switched on warning
- ❑ Seat belt warning (only certain countries)
- ❑ Speed warning (only certain countries)

3 - 32-pin connector -T32-

- ❑ Green
- ❑ Pin assignment ⇒ page 100

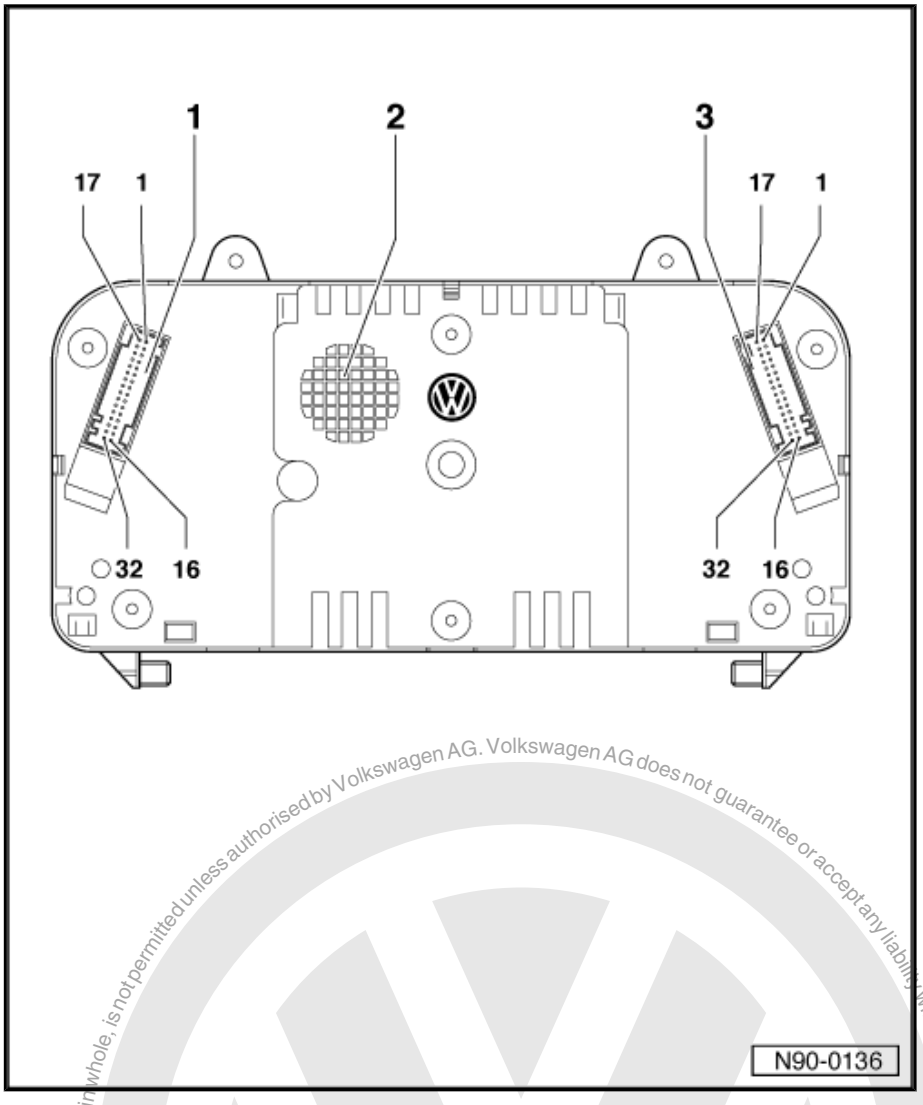

Protected by copyright. Copying for private or commercial purposes, in part or in whole, is not permitted unless authorised by Volkswagen AG. Volkswagen AG does not guarantee or accept any liability with respect to the correctness of information in this document. Copyright by Volkswagen AG.
satelettronica

1.4 Pin assignment of connections on dash panel insert

1.4.1 32-pin connector -T32- a, green

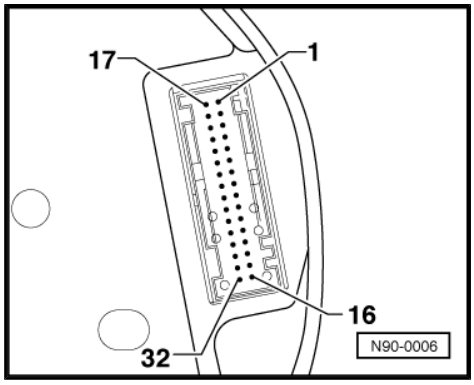

1 - Terminal 15, positive

2 - Right turn signal warning lamp

3 - Electronic speedometer output signal

4 - Not assigned

5 - Fuel gauge

6 - Airbag

7 - Terminal 31, sender earth

8 - Coolant temperature gauge

9 - Terminal 31, earth

10 - Pressure switch

11 - RPM signal

12 - Alternator warning lamp, terminal 61

13 - Glow period warning lamp (only diesel engines) or catalytic converter monitor warning lamp (only certain countries)

14 - Rear fog light warning lamp

15 - Pressure switch (0.25 hpa)

16 - Rear lid open warning lamp

17 - Main beam warning lamp, terminal 56a

18 - Left turn signal warning lamp

19 - Anti-lock brake system (ABS)

20 - Dash panel insert illumination, terminal 58d

21 - Driver's door open signal

22 - Cooling system low level indicator

23 - Terminal 30, positive

24 - Terminal 31, earth

25 - Self-diagnosis K-wire

26 - Right parking light

27 - Left parking light

28 - Input signal to electronic speedometer

29 - Brake system warning lamp

30 - S-contact

31 - Seat belt warning system (only certain countries)

32 - Warning lamp for side lights (only certain countries) or emissions warning lamp (only USA)

Protected by copyright. Copying for private or commercial purposes, in part or in whole, is not permitted unless authorised by Volkswagen AG. Volkswagen AG does not guarantee or accept any liability with respect to the correctness of information in this document. Copyright by Volkswagen AG.
satelettronica

1.4.2 32-pin connector -T32- , blue

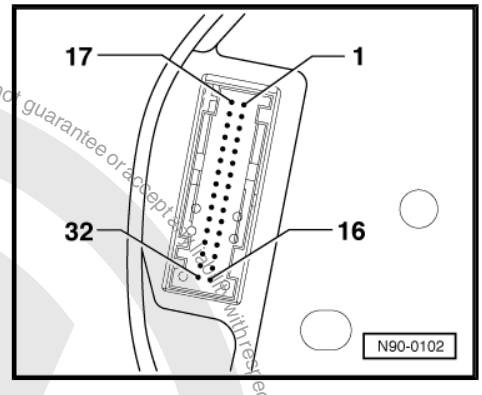

10 - Tank warning (USA only)

12 - Bi-directional wire (air conditioner)

19 - CAN high (input)

20 - CAN low (input)

21 - Temperature sender

26 - Ambient temperature

27 - CAN high (output)

28 - CAN low (output)

32 - Consumption signal

Note

All pins not listed are vacant.

1.5 Warning lamp symbols in dash panel insert

Note

The employment of the warning lamps in the dash panel insert is dependent upon the equipment level, engine and country version of vehicle.

Protected by copyright. Copying for private or commercial purposes, in part or in whole, is not permitted unless authorised by Volkswagen AG. Volkswagen AG does not guarantee or accept any liability with respect to the correctness of information in this document. Copyright by Volkswagen AG.

satelettronica

1 - For fuel reserve

2 - For seat belt

3 - For alternator charge control

4 - For oil/oil pressure

5 - For rear fog light

6 - For coolant temperature

7 - For main beam

8 - For exhaust emission warning lamp

9 - For pre-glow control

10 - For rear lid open

11 - For brake warning/brake system fault warning

12 - For ABS

13 - For Airbag

14 - Gear change up display

15 - For right turn signal

16 - For ESP

17 - For left turn signal

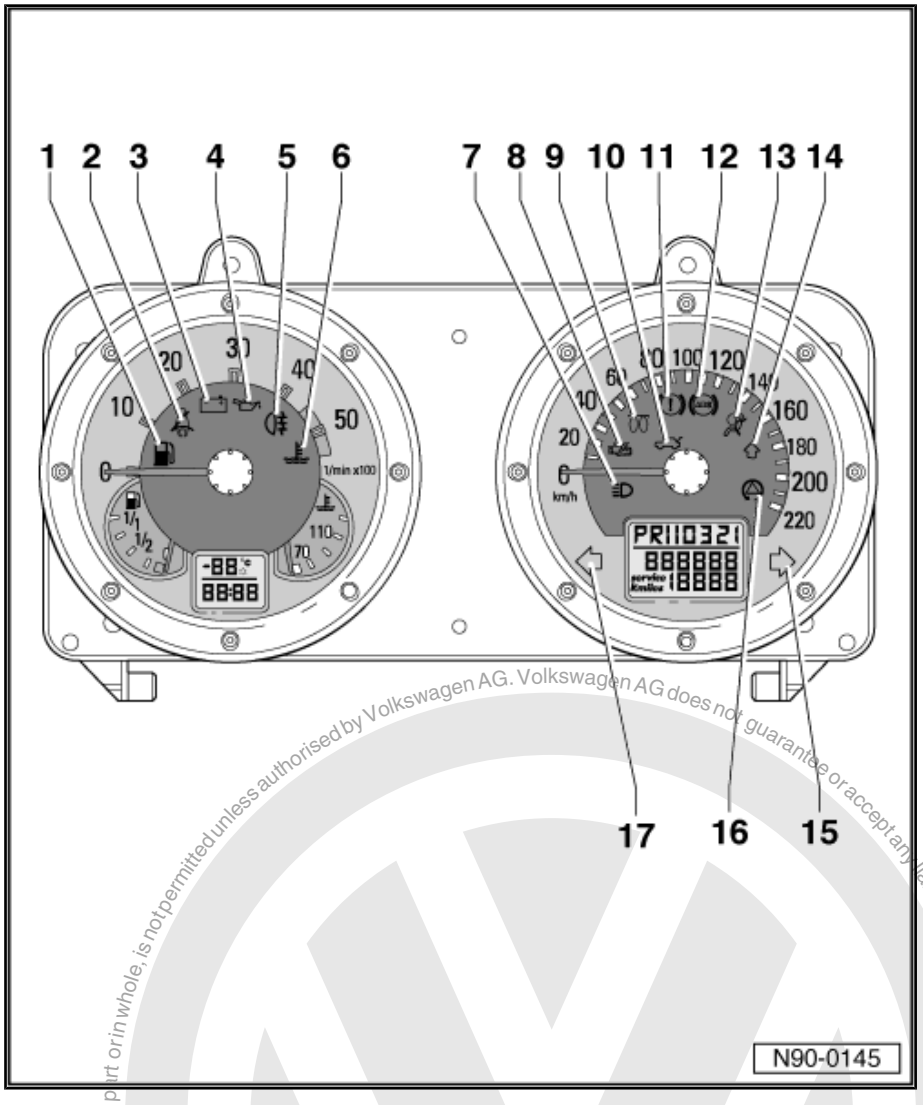

Protected by copyright. Copying for private or commercial purposes, in part or in whole, is not permitted unless authorised by Volkswagen AG. Volkswagen AG does not guarantee or accept any liability with respect to the correctness of information in this document. Copyright by Volkswagen AG.
satelettronica

1.6 Description of instruments

1 - Fuel gauge

2 - Button to adjust clock hours

3 - Ambient temperature display

4 - Clock

5 - Cooling system temperature gauge

6 - Button to adjust clock minutes

7 - Rev. counter

8 - Speedometer

9 - Gear selected display

10 - Odometer

11 - Press key to zero trip recorder

12 - Trip recorder

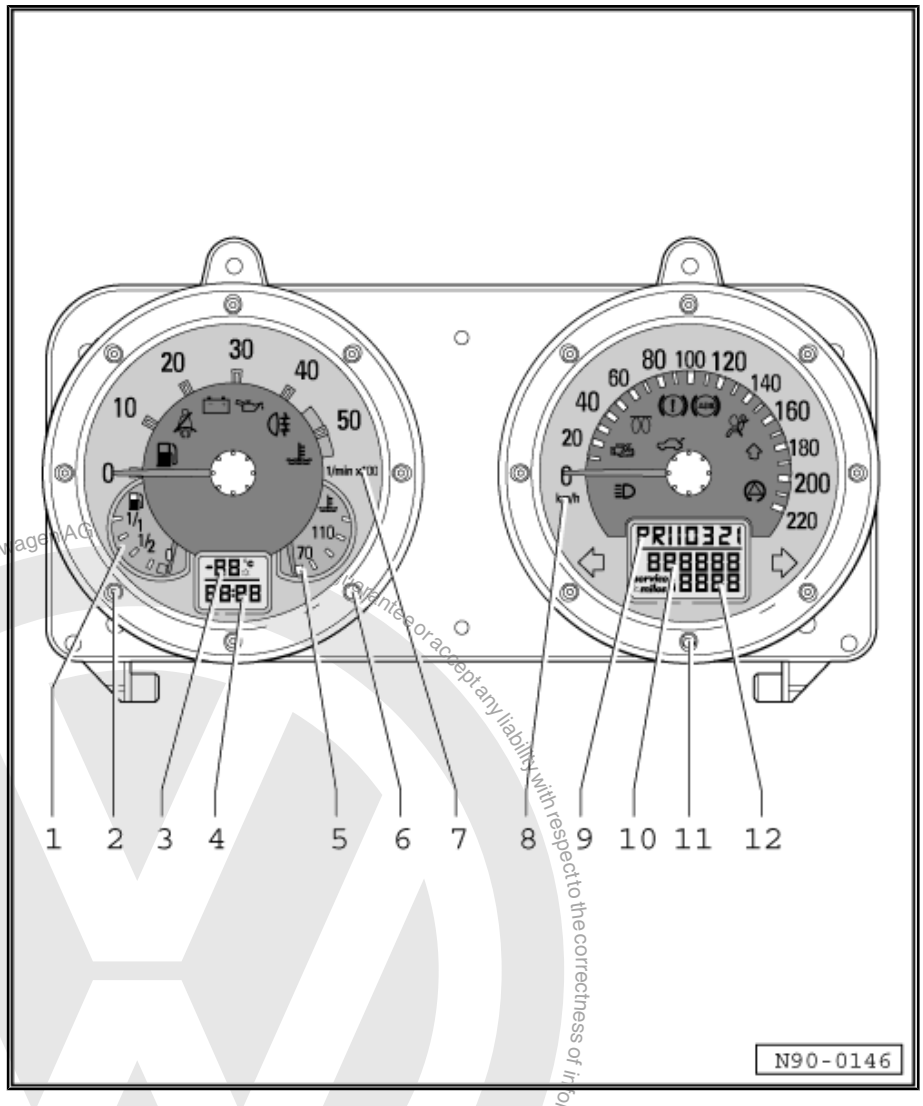

Protected by copyright. Copying for private or commercial purposes, in part or in whole, is not permitted unless authorised by Volkswagen AG.
Copyright by Volkswagen AG.
We cannot guarantee or accept any liability with respect to the correctness of information in this document.
satelettronica

Protected by copyright. Copying for private or commercial purposes, in part or in whole, is not permitted unless authorised by Volkswagen AG. Volkswagen AG does not guarantee or accept any liability with respect to the correctness of information in this document. Copyright by Volkswagen AG.

2 Service interval display

2.1 Resetting service interval display

⇒ Maintenance ; Booklet 29

satelettronica

92 – Windscreen wash/wipe system

1 Windscreen wiper system

Note

- *To disconnect and reconnect the battery, the procedure described in the workshop manual should be strictly adhered to* *⇒ page 70* *.*
- *If vehicle has a security-coded radio, obtain anti-theft code before disconnecting battery.*

1.1 Assembly overview - windscreen wiper system

1 - Wiper motor
- ❑ Removing wiper frame ⇒ page 107

2 - Drive shaft

3 - Connecting rod

4 - Crank
- ❑ Setting park position ⇒ page 107

5 - 13 mm hexagon nut
- ❑ 20 Nm

6 - Cover cap

7 - 15 mm hexagon nut
- ❑ 16 Nm

8 - Wiper arm

9 - Wiper blade
- ❑ Adjusting park position ⇒ page 109

10 - Wiper blade rubber
- ❑ Removing and installing wiper rubber blade ⇒ page 110

11 - Wiper frame

12 - 10 mm hexagon bolt
- ❑ 5 Nm

13 - 10 mm hexagon bolt
- ❑ 5 Nm

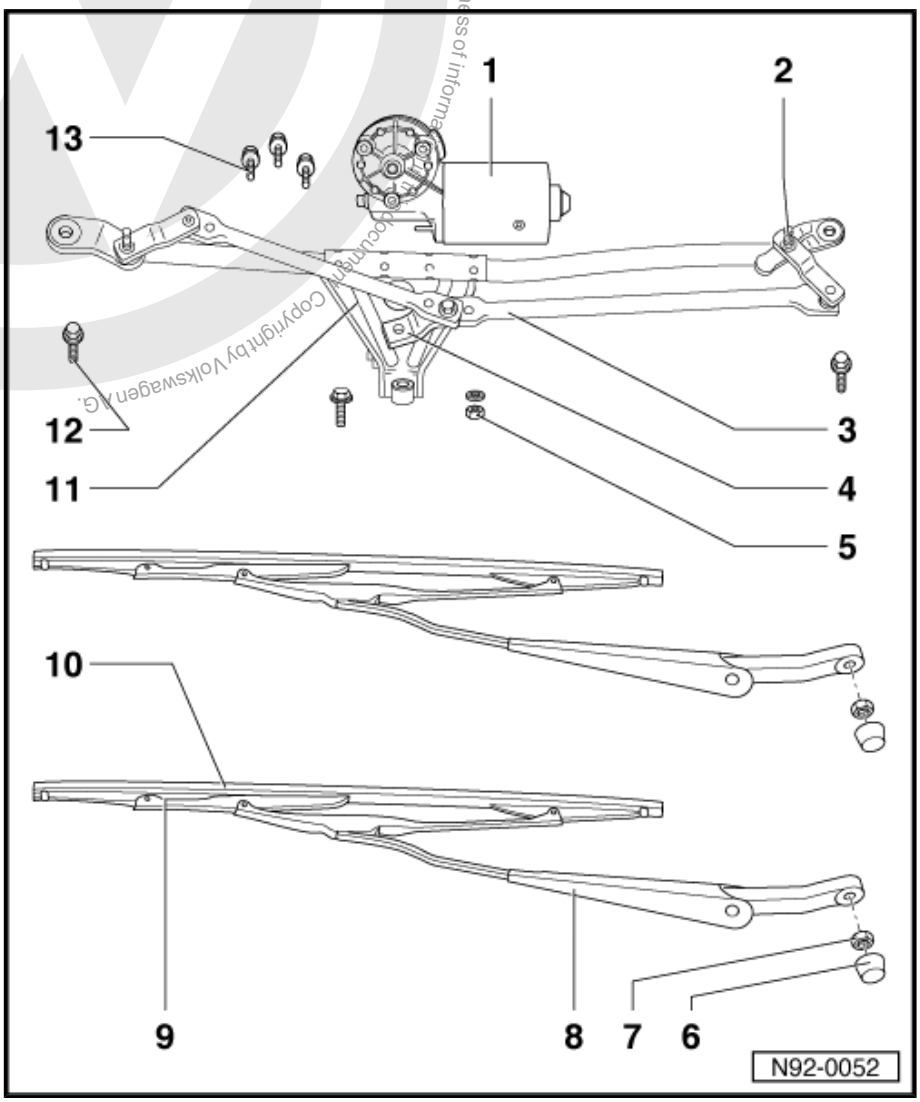

1.2 Removing and installing windscreen wiper system

Special tools and workshop equipment required

Protected by copyright. Copying for private or commercial purposes, in part or in whole, is not permitted unless authorised by Volkswagen AG. Volkswagen AG does not guarantee or accept any liability with respect to the correctness of information in this document. Copyright by Volkswagen AG.
satelettronica

♦ Torque wrench -V.A.G 1331-

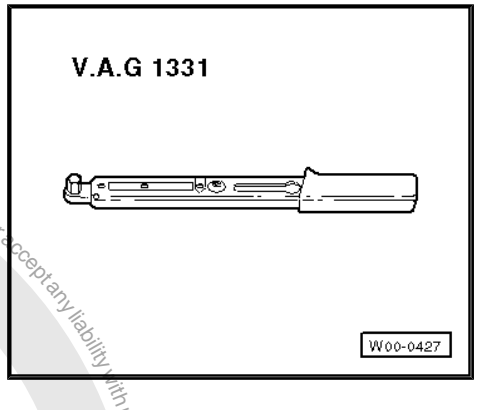

Protected by copyright. Copying for private or commercial purposes, in part or in whole, is not permitted unless authorised by Volkswagen AG. Volkswagen AG does not guarantee or accept any liability with respect to the correctness of information in this document. Copyright by Volkswagen AG.

1.2.1 Removing wiper arms

Note

Before removing the wiper arms check that the wiper motor is in park position. Only then can the wiper arm park position be correctly set when installing.

– Move wipers to park position.
– Disconnect battery ⇒ page 70 .
– Lever off black cover caps -arrows- with a screwdriver.

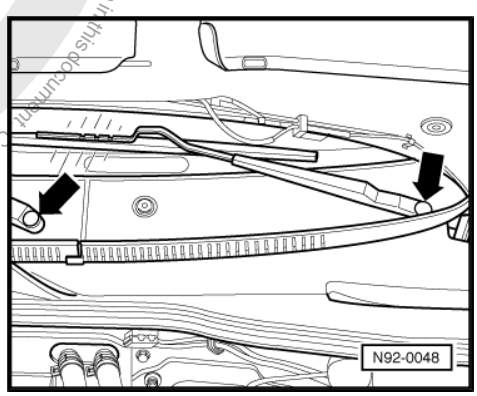

– Loosen hexagon nuts -arrows- but do not remove completely.
– Move wiper arms lightly until they release.
– Remove hexagon nuts completely and remove wiper arms.

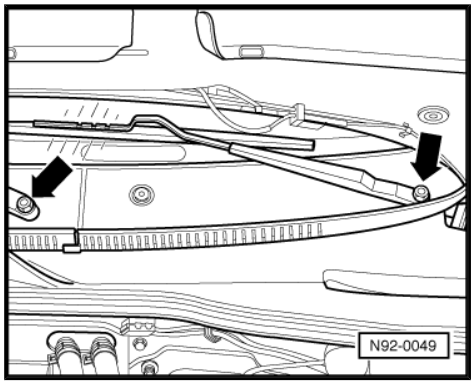

1.2.2 Removing cowl panel

– Unclip three-part cowl panel grille and remove carefully.

Note

Unclip rear part of cowl panel with bonnet closed.

satelettronica

1.2.3 Removing wiper frame with linkage and wiper motor

– Remove hexagon nuts and hexagon bolts -arrows- and washers.
– Pull connector off wiper motor.
– Remove wiper frame complete.

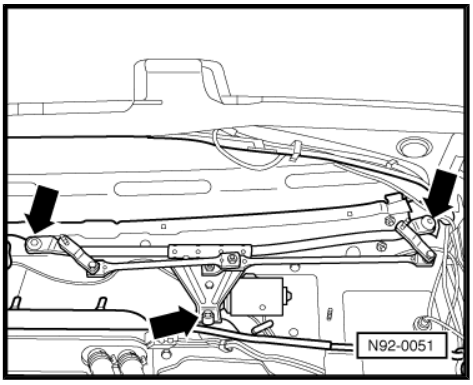

1.2.4 Removing wiper motor from wiper frame

– Lever rods -1- off crank -3- using a large screwdriver.
– Remove M8 hexagon nut -4-.
– Remove crank -3-.
– Remove the three M6 securing bolts -2- for the wiper motor.

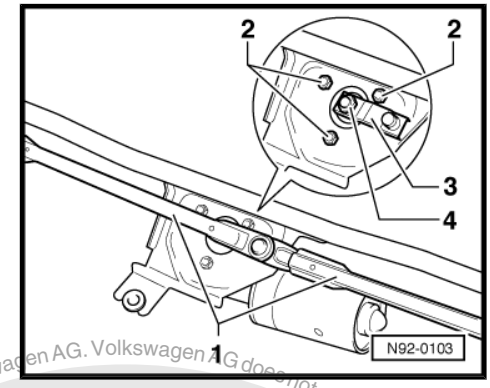

1.2.5 Installing wiper motor in wiper frame

– Secure wiper motor using the M6 securing bolts -2-. Torque setting: 5 Nm.

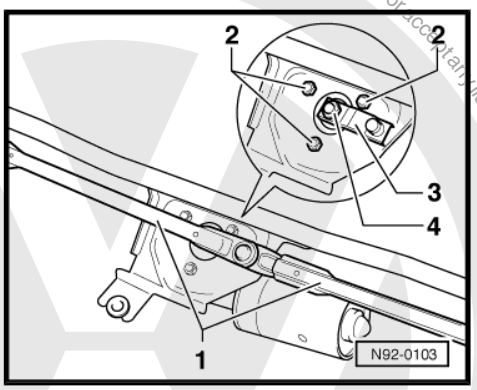

1.2.6 Setting park position

– Connecting battery ⇒ page 70 .
– Run wiper motor to park position and install.

Protected by copyright. Copying for private or commercial purposes, in part or in whole, is not permitted unless authorised by Volkswagen AG. Volkswagen AG does not guarantee or accept any liability with respect to the correctness of information in this document. Copyright by Volkswagen AG.
satelettronica

– First press connecting rod -2- onto the loose crank -3- and then press on connecting rod -1-.
– Align connecting rods -1- and -2- to the centre line shown in the figure.
– Tighten nut on crank -3-.

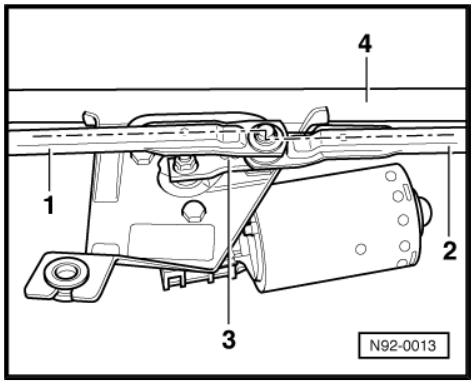

1.2.7 Installing wiper frame with linkage and wiper motor

– Insert wiper frame with wiper motor.
– Attach connector to wiper motor.
– Fit washers and tighten hexagon nuts and bolts -arrows-.

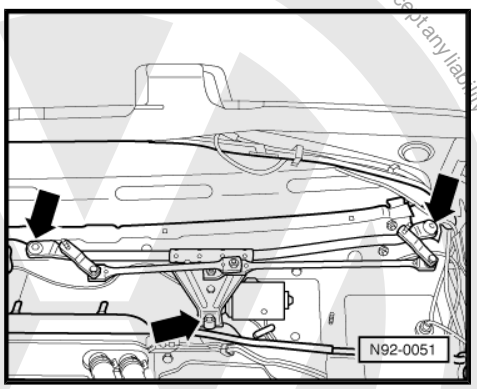

1.2.8 Installing cowl panel

– Insert and secure cowl panel.

Note

Secure rear part of cowl panel with bonnet closed.

1.2.9 Installing wiper arms

– Fitting wiper arms.
– Adjust wiper blade park position ⇒ page 109 .
– Tighten M8 hexagon nuts -arrows-.

Wiper arm torque setting: 16 Nm.

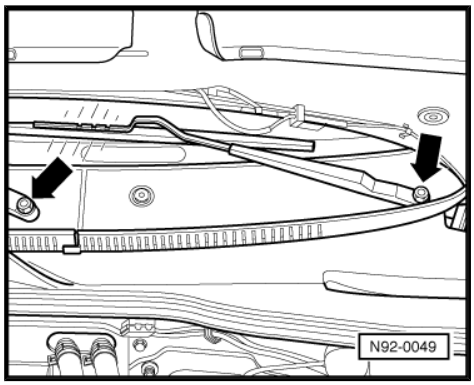

Protected by copyright. Copyright by Volkswagen AG. Volkswagen AG does not guarantee or accept any liability with respect to the correctness of information in this document. Copyright by Volkswagen AG. Copying for private or commercial purposes, in part or in whole, is not permitted unless authorised by Volkswagen AG.
satelettronica

– Fit black cover caps -arrows-.

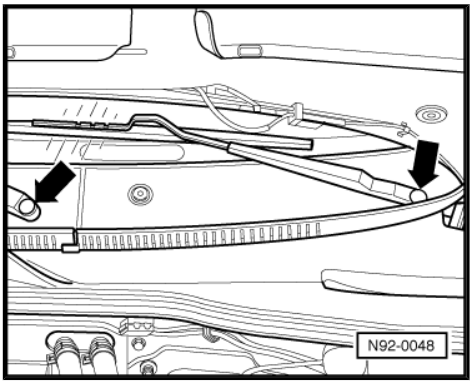

1.2.10 Adjusting wiper blade park position

Note

For RHD vehicles, the wiper blades are arranged in the mirror image.

– Check rest position.

Driver's side:

Distance -A- between wiper blade and lower edge of windscreen must be 20 mm.

– Adjust park position by moving wiper arm as necessary.

Wiper arm torque setting: 16 Nm.

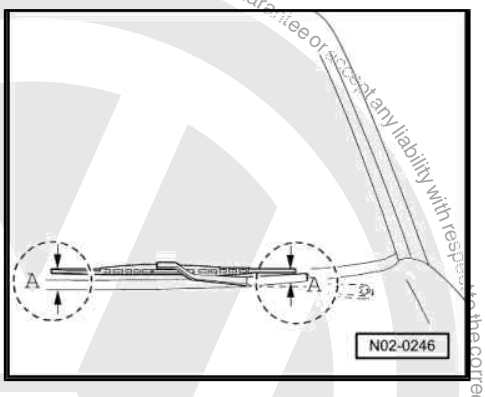

Front passenger side:

Distance -A- between wiper blade and lower edge of windscreen must be 20 mm.

– Adjust park position by moving wiper arm as necessary.

Wiper arm torque setting: 16 Nm.

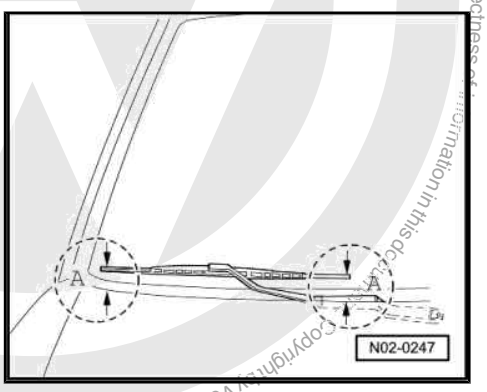

Protected by copyright. Copying for private or commercial purposes, in part or in whole, is not permitted unless authorised by Volkswagen AG. Volkswagen AG does not guarantee or accept any liability with respect to the correctness of information in this document. Copyright by Volkswagen AG.
satelettronica

1.3 Removing and installing wiper rubber blade

– Using a pair of pliers press together both steel strips on the enclosed side of the rubber, slide sideways out of the upper clip and remove rubber insert complete with strips from the other clips of the wiper blade.

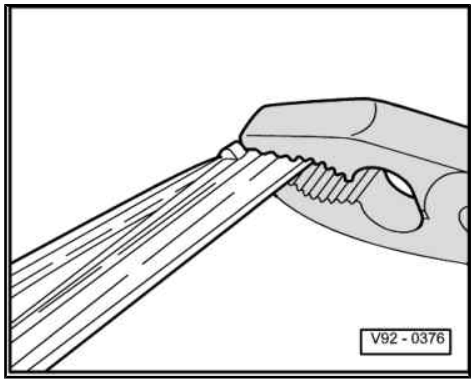

– Fit new rubber insert into lower clips of wiper blade.

– Guide both strips into the first groove of the wiper rubber so that the recesses in the strips face the rubber and engage in the rubber lugs of the groove.

– Using pliers press both steel strips and rubber together and insert into the upper clips so that the lugs of the clips on both sides engage in the retaining slots -arrow- of the wiper rubber.

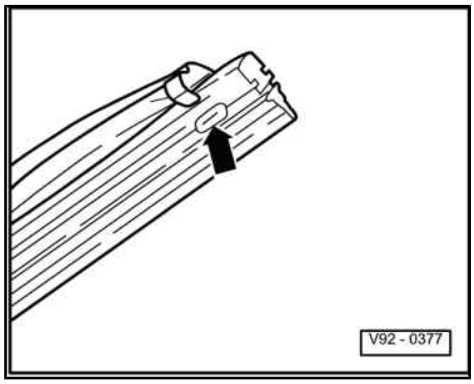

Protected by copyright. Copying for private or commercial purposes, in part or in whole, is not permitted unless authorised by Volkswagen AG. Volkswagen AG does not guarantee or accept any liability with respect to the correctness of information in this document. Copyright by Volkswagen AG.

satelettronica

Protected by copyright. Copying for private or commercial purposes, in part or in whole, is not permitted unless authorised by Volkswagen AG. Volkswagen AG does not guarantee or accept any liability with respect to the correctness of information in this document. Copyright by Volkswagen AG.

2 Windscreen washer and headlight washer system

2.1 Assembly overview - windscreen washer and headlight washer system

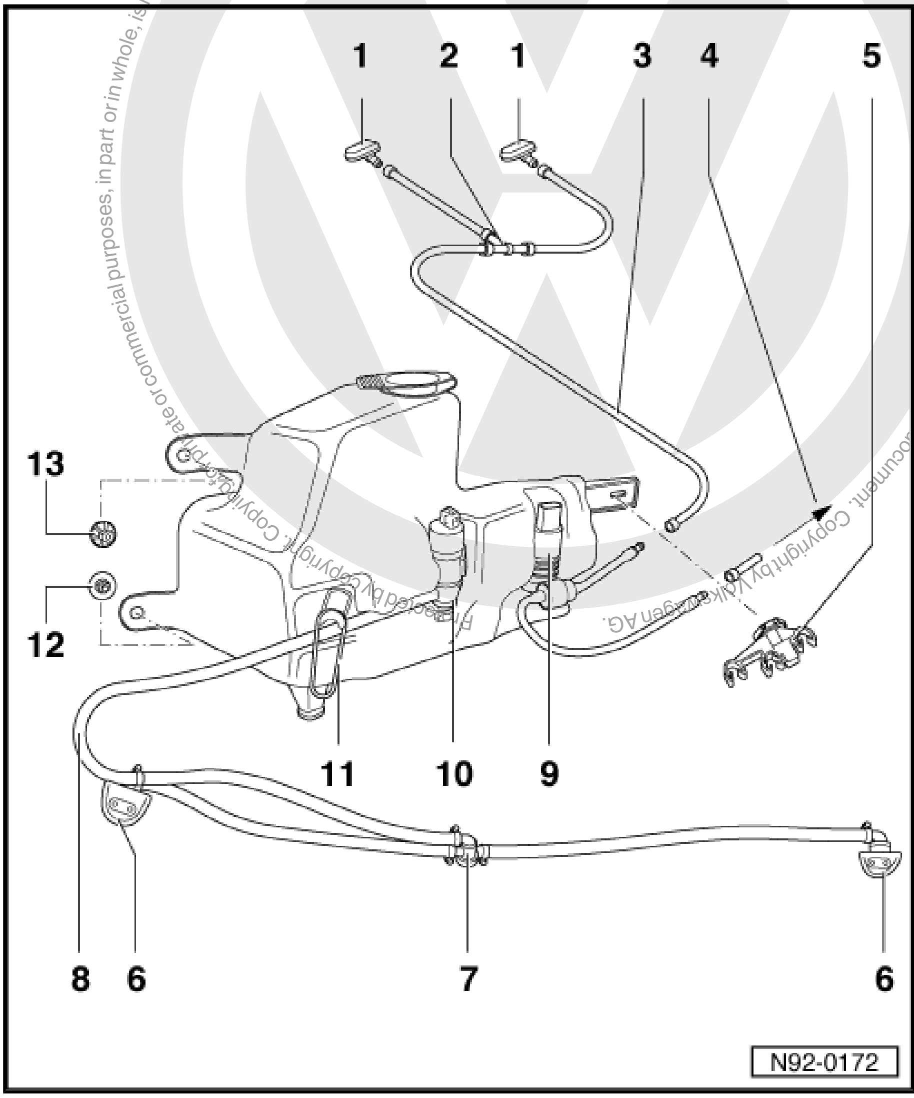

1 - Windscreen washer system jets
- ❑ Removing ⇒ page 113
- ❑ Adjusting ⇒ page 111

2 - Junction

3 - Hose to windscreen washer system
- ❑ With white connection at connector piece

4 - To rear window washer system
- ❑ With black connection at connector piece

5 - Bracket

6 - Jets
- ❑ Adjusting ⇒ page 112
- ❑ Before removing: remove front bumper ⇒ General body repairs, exterior; Rep. Gr. 63 ; Bumpers; Front bumper

7 - Back-pressure valve
- ❑ Note hose connections

8 - Hose to headlight washer system

9 - Windscreen washer pump

10 - Headlight washer system pump

11 - Securing rubber

12 - Hexagon nut

13 - Hexagon nut

2.2 Adjusting windscreen washer system jets

Special tools and workshop equipment required

satelettronica

- Adjusting tool -T10127- with needles (Qty. 5) -3125/5 A-

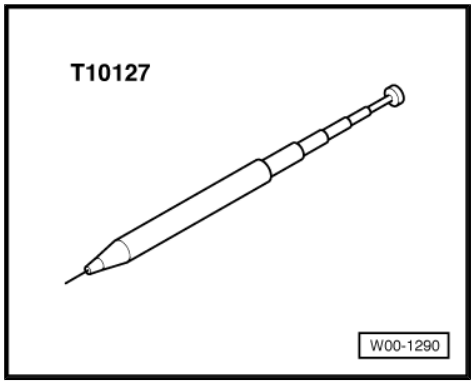

Note

- *Renew spray jet if spray is irregular or cannot be adjusted to the prescribed setting.*
- *Never use a needle or similar object, as otherwise water passages in washer spray jets will be damaged!*

– Check jet settings and adjust washer spray jets if necessary using adjusting tool -T10127- with needles (Qty. 5) -3125/5 A- .

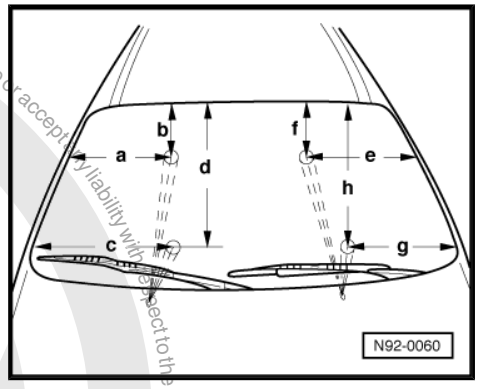

a	280 mm	e	400 mm
b	300 mm	f	330 mm
c	430 mm	g	330 mm
d	560 mm	h	560 mm

Tolerance: ± 20 mm

2.3 Adjusting headlight washer system jets

Special tools and workshop equipment required

- Adjusting device -3019 A-

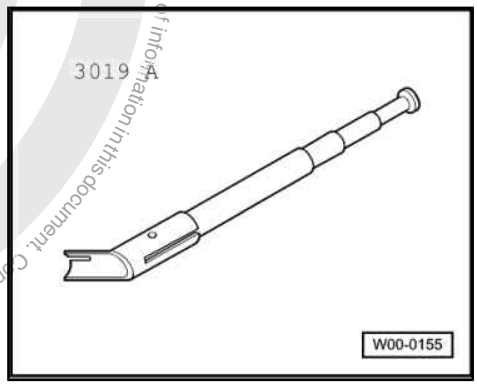

Carry out following procedures:

Protected by copyright. Copyright for private or commercial purposes, in part or in whole, is not permitted unless authorised by Volkswagen AG. Volkswagen AG does not guarantee or accept any liability with respect to the correctness of information in this document. Copyright by Volkswagen AG.
satelettronica

The following washer spray jet setting figures are for the left headlight (right headlight is a mirror image):

– Check washer spray jet settings.

Right headlight:

– Set outer right-hand spray jet to following dimensions:

a - 130 mm

b - 60 mm

– Set inner right-hand spray jet to following dimensions:

c - 65 mm

d - 125 mm

– Adjust jet with adjusting tool -3019 A- if necessary.

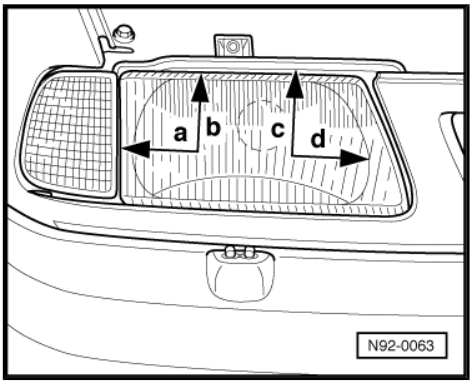

2.4 Removing windscreen washer system spray jets

– Pull hose off jets and disconnect 2-pin connector -arrows-.

– Press locking lug on jet back and push jet out upwards.

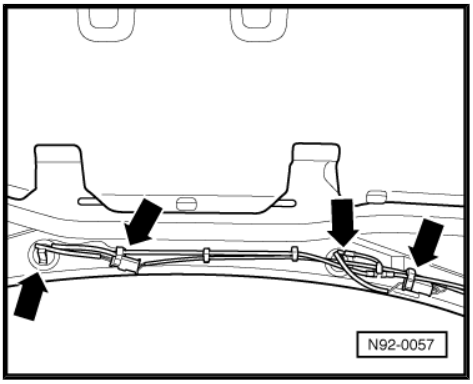

2.5 Removing headlight washer system spray jets

– Remove front bumper ⇒ General body repairs, exterior; Rep. Gr. 63 ; Bumpers; Front bumper .

– Pull hoses off jets -arrows-.

– Remove jet securing screws -arrows- and remove jet.

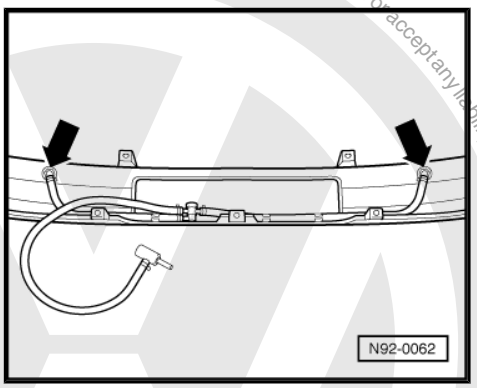

2.6 Removing windscreen washer and headlight washer system reservoir

– If necessary, remove intake hose ⇒ Injection and ignition system; Rep. Gr. 24 .

– Unclip line to windscreen washer pump and pull connector off washer pump.

satelettronica
Protected by copyright. Copying for private or commercial purposes, in part or in whole, is not permitted unless authorised by Volkswagen AG. Volkswagen AG does not guarantee or accept any liability with respect to the correctness of information in this document. Copyright by Volkswagen AG.

Protected by copyright. Copying for private or commercial purposes, in part or in whole, is not permitted unless authorised by Volkswagen AG. Volkswagen AG does not guarantee or accept any liability with respect to the correctness of information in this document. Copyright by Volkswagen AG.

- Separate connector couplings -arrows-.
- Pull connector off windscreen washer system pump (if fitted).
- Pull off hoses to headlight spray jets from the pump.
- Unclip hoses on rear of reservoir, if fitted, and unscrew retainer.

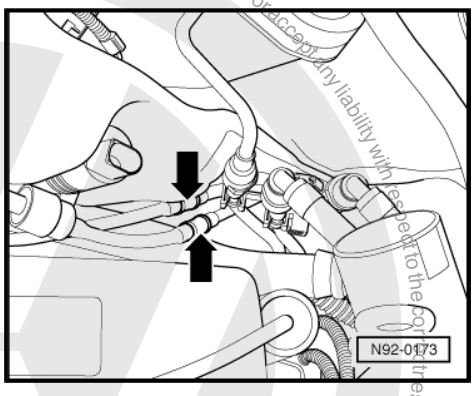

- Remove hexagon nuts -arrows-.
- Unhook rubber ring -1- and carefully take reservoir out upwards.

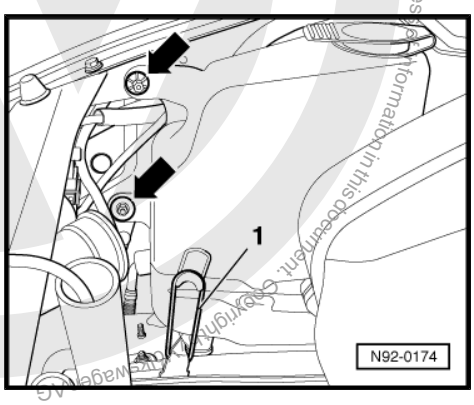

satelettronica

3 Rear window wipe/wash system

Note

- *To disconnect and reconnect the battery, the procedure described in the workshop manual should be strictly adhered to* *⇒ page 70* *.*
- *If vehicle has a security-coded radio, obtain anti-theft code before disconnecting battery.*

3.1 Assembly overview - rear window wiper system

1 - 10 mm hexagon bolt

2 - Rubber ring

3 - Spacer

4 - Wiper motor

- ❑ Removing ⇒ page 117

5 - Rubber ring

6 - Cover cap

7 - 22 mm hexagon nut

8 - Wiper arm

- ❑ Adjusting park position ⇒ page 115
- ❑ Removing and installing wiper rubber blade ⇒ page 110

9 - 13 mm hexagon nut

10 - Cover cap

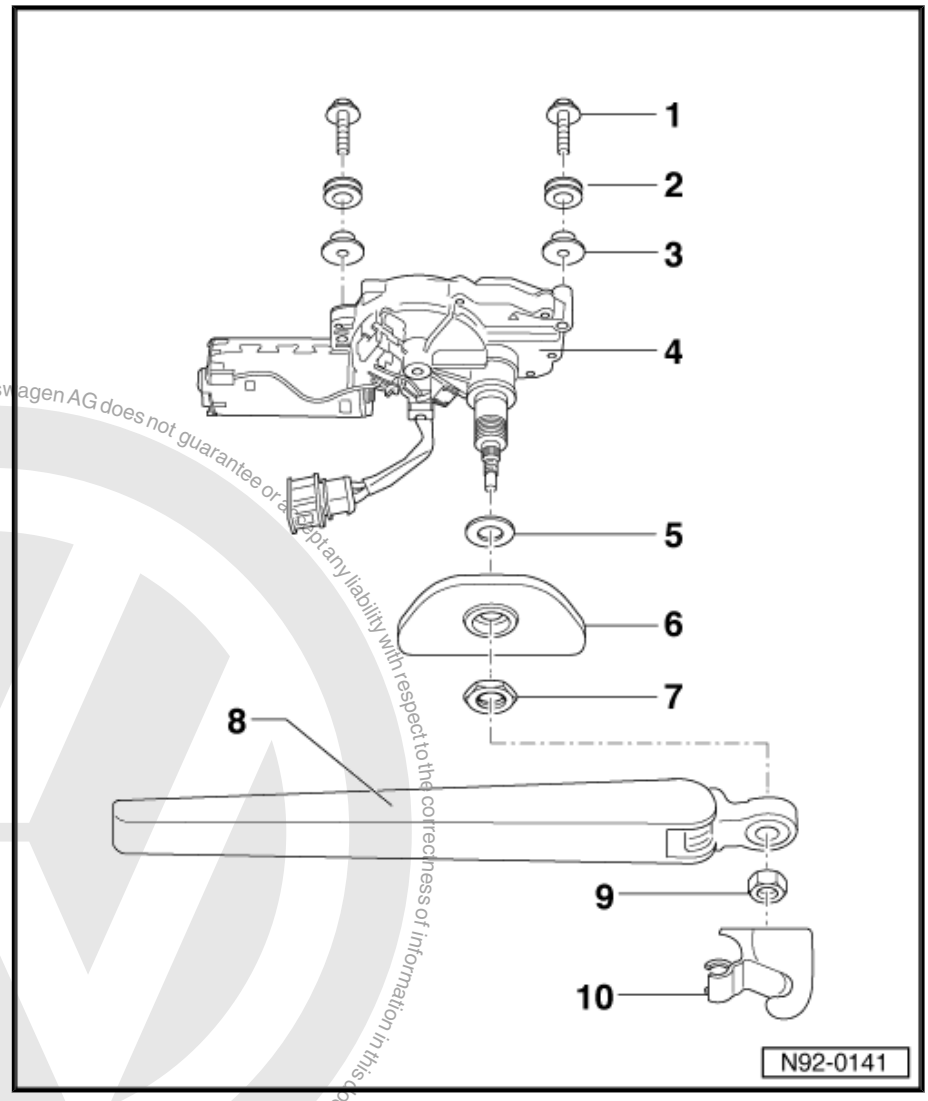

3.2 Adjusting rear window wiper park position

Special tools and workshop equipment required

satelettronica

- Torque wrench -V.A.G 1331-

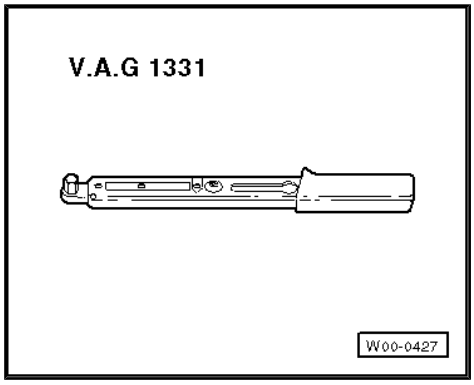

Distance -a- between wiper blade and lower edge of window should be 25 mm.

– Adjust park position by moving wiper arm as necessary. Wiper arm torque setting: 15 Nm.

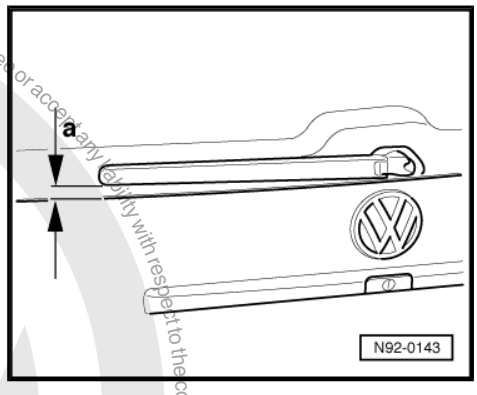

3.3 Adjusting washer jet

Special tools and workshop equipment required

- Adjusting tool -T10127- with needles (Qty. 5) -3125/5 A-

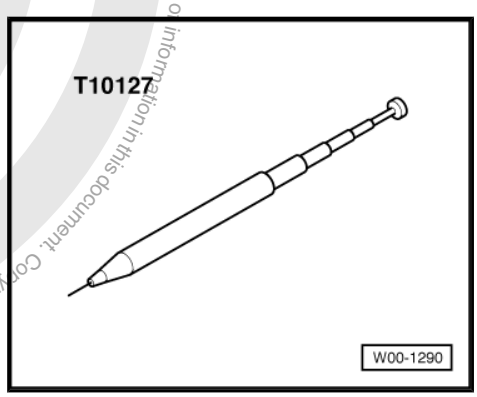

Protected by copyright. Copying for private or commercial purposes, in part or in whole, is not permitted unless authorised by Volkswagen AG. Volkswagen AG does not guarantee or accept any liability with respect to the correctness of information in this document. Copyright by Volkswagen AG.

satelettronica

Note

- *Renew washer spray jet if spray is irregular or cannot be adjusted to centre of wiped area.*
- *Never use a needle or similar object, as otherwise water passages in washer spray jets will be damaged!*

– Check spray jet setting.

Rear window washer spray jet settings:

Spray jet must spray to centre of wiped area.

– Adjust washer spray jet using adjusting tool -T10127- with needles (Qty. 5) -3125/5 A- , if necessary.

3.4 Removing rear window wiper

– Move wipers to park position.

– Disconnect battery ⇒ page 70 .

3.4.1 Removing wiper arm

– Open cover cap.

– Loosen 13 mm hexagon nut -arrow-.

– Fold wiper arm up and release from taper by moving arm sideways.

– Remove hexagon nut and take wiper arm off.

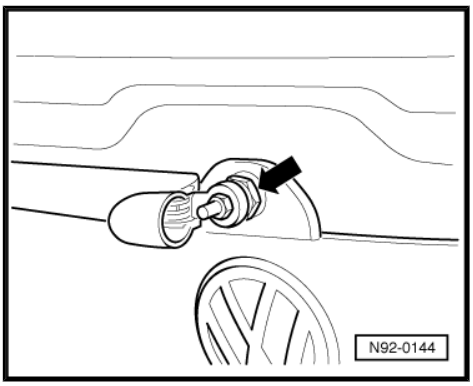

3.4.2 Removing rear lid trim

– Remove cross-head screws (in grip recess) -arrows-.

– Carefully pull trim off all round and remove.

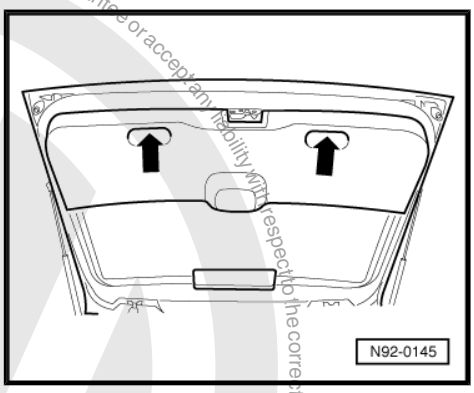

3.4.3 Removing rear wiper motor

– Remove 22 mm hexagon nut -1- and remove cover cap -2-.

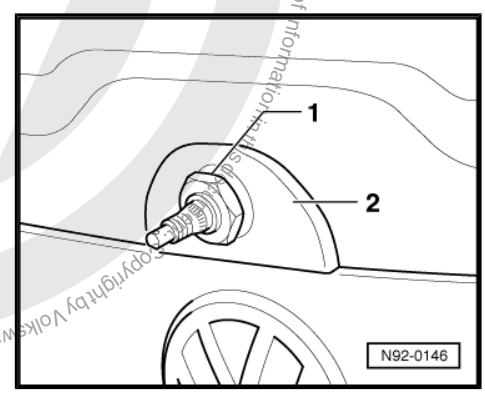

Protected by copyright. Copying for private or commercial purposes, in part or in whole, is not permitted unless authorised by Volkswagen AG. Volkswagen AG does not guarantee or accept any liability with respect to the correctness of information. © Copyright by Volkswagen AG.
satelettronica

– Pull connector -1- off wiper motor.
– Pull off hose -2- to washer jet.
– Remove 10 mm hexagon bolts -arrows- and remove wiper motor.

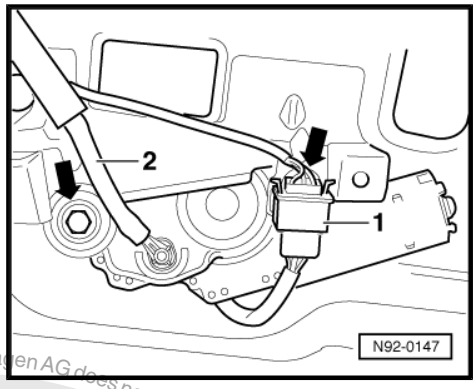

Protected by copyright. Copying for private or commercial purposes, in part or in whole, is not permitted unless authorised by Volkswagen AG. Volkswagen AG does not guarantee or accept any liability with respect to the correctness of information in this document. Copyright by Volkswagen AG.

satelettronica

94 – Lights, bulbs, switches - exterior

1 Headlight

1.1 Assembly overview - headlight

Note

- *To disconnect and reconnect the battery, the procedure described in the workshop manual should be strictly adhered to* *⇒ page 70* *.*
- *If vehicle has a security-coded radio, obtain anti-theft code before disconnecting battery.*
- *After any measures which could affect the headlight setting, the headlight must be checked and if necessary adjusted ⇒ Maintenance , Booklet 29 .*

1 - Headlight

❑ Removing and installing ⇒ page 120

2 - Side light bulb

Bulb 12 V, 4 W.

❑ Renewing ⇒ page 120

3 - Side light bulb holder

4 - Cap

5 - Spring retaining clip

6 - Twin filament bulb for main and dipped beams

Bulb H4 12 V, 60 W/55 W

❑ Renewing ⇒ page 120

7 - Headlight range control motor

❑ Removing and installing ⇒ page 121

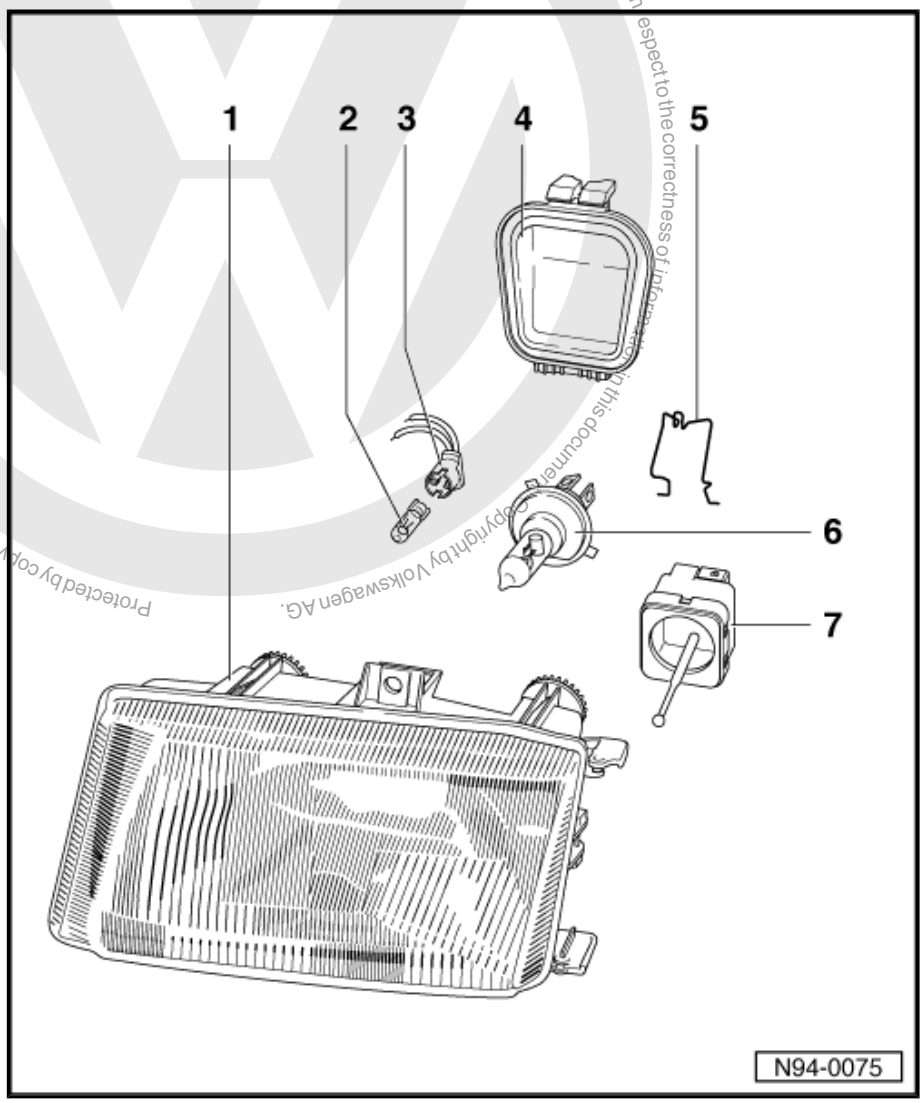

Protected by copyright. Copyright by Volkswagen AG. Volkswagen AG does not guarantee or accept any liability with respect to the correctness of information in this document. Copyright by Volkswagen AG. Protected by copyright. Copyright by Volkswagen AG. Unauthorised use, in whole or in part, is not permitted unless authorised by Volkswagen AG. Volkswagen AG does not guarantee or accept any liability with respect to the correctness of information in this document.
satelettronica

1.2 Removing and installing headlight

Removing:

– Disconnect battery ⇒ page 70 .

– Remove radiator grille and radiator grille trim.

– Disconnect headlight and turn signal multi-pin connector.

– Remove securing bolts -arrows-.

– Pull headlight housing out forwards.

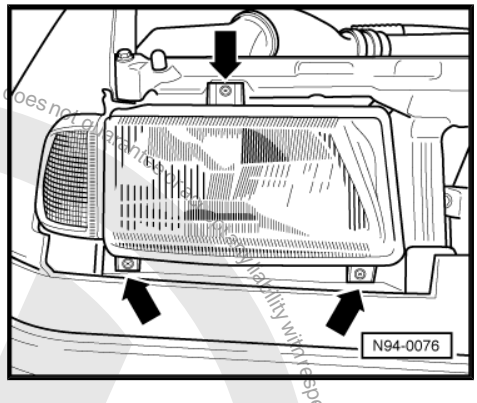

Installing:

Installation is carried out in the reverse order. When installing observe the following:

– Check headlight settings and adjust if necessary ⇒ Maintenance ; Booklet 29 .

1.3 Replacing headlight bulb

Note

Do not touch bulb glass when fitting a new bulb. Fingers leave traces of grease on the glass, which evaporate when the bulb is switched on and cause the glass to cloud over.

1.3.1 Replacing side light bulb

– Release sealing cover on rear of headlight housing and remove.

– Pull holder -4- with bulb on connector out from reflector.

– After changing bulb, push bulb with holder into reflector to stop.

– Install cover on rear of headlight housing.

– Check function of headlight after installing a new bulb.

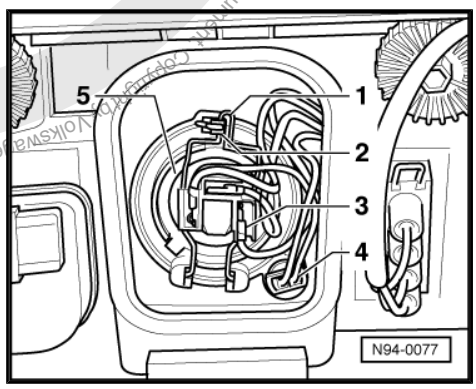

1.3.2 Renewing dipped beam and main beam bulb

– Release sealing cover on rear of headlight housing and remove.

Protected by copyright. Copyright by Volkswagen AG.
Copyright by Volkswagen AG. Volkswagen AG does not guarantee or accept any liability with respect to the correctness of information in this document. Copying for private or commercial purposes, in part or in whole, is not permitted unless authorised by Volkswagen AG.
satelettronica

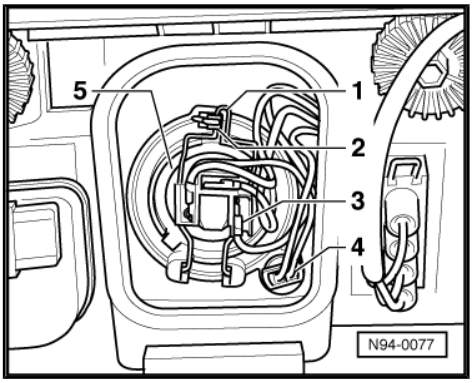

– Pull connector -3- off twin-filament bulb.
– Unclip spring retaining clip -1- from retaining lug -2- and move clip downwards.
– Pull twin-filament bulb -5- out of reflector.
– Do not touch bulb glass when installing.
– Insert new bulb so that the lugs on the disc plate align with the recesses in the reflector.
– Install cover on rear of headlight housing.
– Check function of headlight after installing a new bulb.

1.4 Removing and installing headlight range control motor

Note

- *The control motor can only be removed and installed when the headlight housing has been removed.*
- *If control motors are removed and installed or renewed, always carry out the headlight basic setting with a beam setting appliance. Inclination dimension is embossed on headlight housing.*

Removing:

– Remove headlight ⇒ page 120 .
– Release sealing cover on rear of headlight housing and remove.
– Disconnect headlight range control motor connector.
– Release left-hand headlight control motor -1- by turning to left and right-hand control motor by turning to right.
– Pull positioning shaft ball head forcefully out of locking device in reflector.

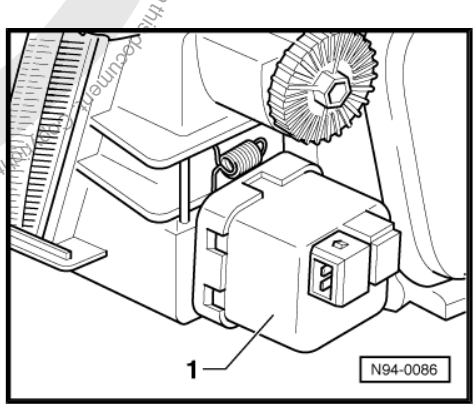

Installing:

– Push control motor into the ball head socket on reflector until adjustment shaft engages with reflector.
– Lock control motor in position by turning.
– Fit sealing cap.
– Install headlight ⇒ page 120 .
– Check headlight settings and adjust if necessary ⇒ Maintenance ; Booklet 29 .

1.5 Adjusting headlights

⇒ Maintenance ; Booklet 29

Protected by copyright. Copying for private or commercial purposes, in part or in whole, is not permitted unless authorised by Volkswagen AG. Volkswagen AG does not guarantee or accept any liability with respect to the correctness of information in this document. Copyright by Volkswagen AG.
satelettronica

2 Front fog lights

2.1 Removing and installing fog light

Removing:

– Remove cover ⇒ General body repairs, exterior; Rep. Gr. 63 ; Front bumper - Assembly overview .

– Remove securing bolts -arrows-.

– Pull fog light housing out to rear of bumper and disconnect connector.

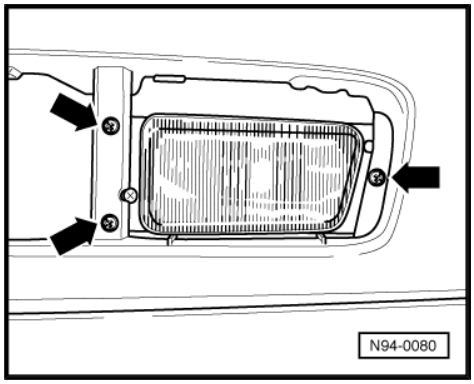

Installing:

Installation is carried out in the reverse sequence.

– Check fog light settings ⇒ Maintenance ; Booklet 29 .

2.2 Removing and installing fog light bulb

Note

Do not touch bulb glass when fitting a new bulb. Fingers leave traces of grease on the glass, which evaporate when the bulb is switched on and cause the glass to cloud over.

Removing:

– Remove securing bolts -arrows- and remove cover cap -1-.

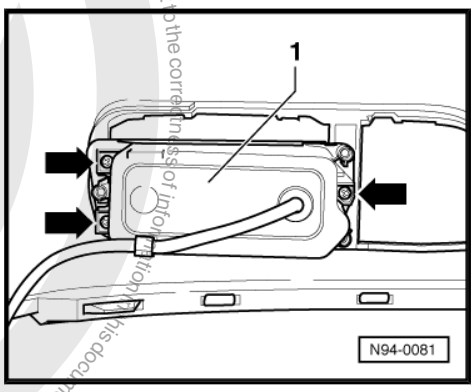

– Disconnect connector -1- of H3 halogen bulb (12 V/55 W) in the cover cap.

– Press spring retaining clip -2- over retaining lug and swing out.

– Pull bulb out of housing.

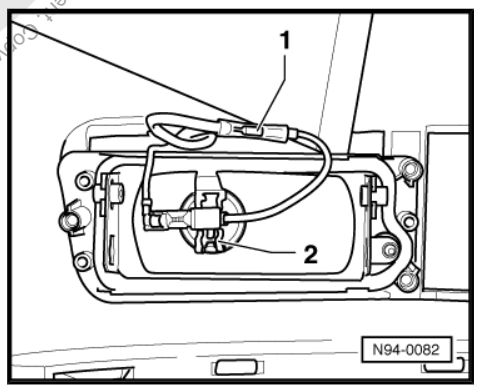

Installing:

Installation is carried out in the reverse order. When installing observe the following:

– Insert bulb so that the recess in the bulb holder aligns with guide lug of housing.

– Check fog light settings after installing a new bulb ⇒ Maintenance ; Booklet 29 .

Protected by copyright. Copying for private or commercial purposes, in part or in whole, is not permitted unless authorised by Volkswagen AG. Volkswagen AG does not guarantee or accept any liability with respect to the correctness of information in this document. Copyright by Volkswagen AG.
satelettronica

3 Front turn signals

3.1 Removing and installing front turn signal

Removing:

– Push locking lugs -arrows- outwards.
– Pull turn signal out forwards.
– Disconnect connector.

Installing:

– Reconnect connector.
– Slide turn signal into the wing aperture until it locates.

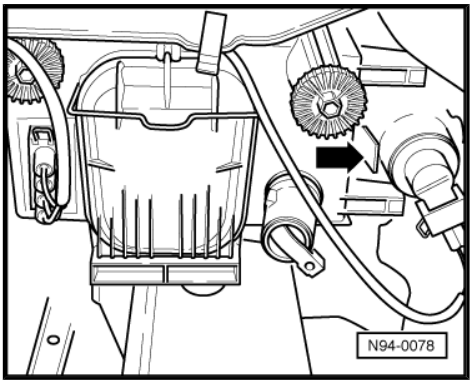

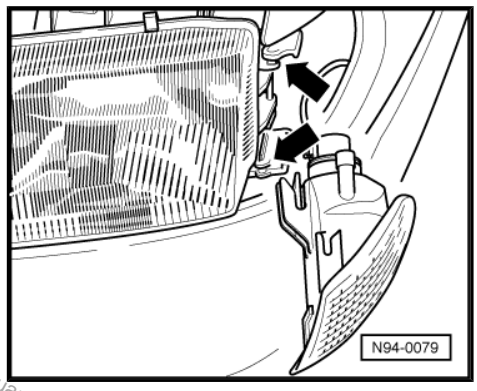

Note

The lugs on the turn signal must locate in the guides -arrows- of the headlight housing.

3.2 Removing and installing turn signal bulb

Removing:

– Turn bulb holder in -direction of arrow- and pull out from housing.
– Remove bulb from holder.

Installing:

Installation is carried out in the reverse sequence.

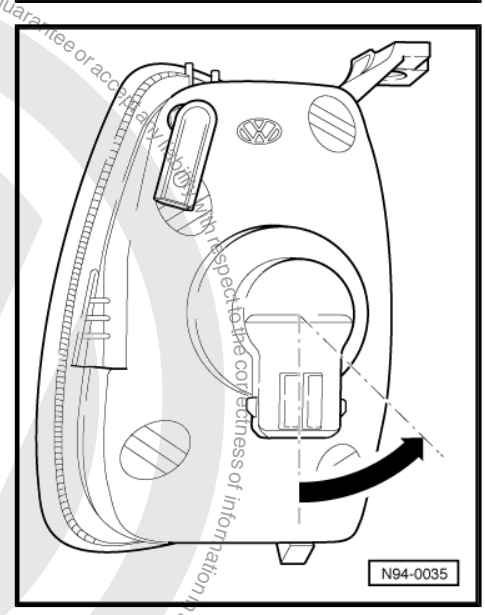

Note

Do not touch bulb glass when fitting a new bulb. Fingers leave traces of grease on the glass, which evaporate when the bulb is switched on and cause the glass to cloud over.

When installing, ensure that the bulb holder engages in the housing by turning in opposite direction to -direction of arrow-.

Protected by copyright. Copying for private or commercial purposes, in part or in whole, is not permitted unless authorised by Volkswagen AG. Volkswagen AG does not guarantee or accept any liability with respect to the correctness of information in this document. Copyright by Volkswagen AG.
satelettronica

4 Side mounted repeater turn signals

4.1 Removing and installing side mounted repeater turn signal

Removing:

Note

Extreme caution must be exercised when removing the side mounted repeater turn signal as removing is only possible in one direction ,and when installed it is not possible to recognise on which side of the turn signal the spring clip or the mounting is located. When using force to remove the light on the spring clip side there is a great danger that the turn signal or the vehicle paintwork surface will be damaged.

– Press turn signal with a suitable tool on the mounting side -1- carefully in direction of arrow against the force of the spring clip -2- on the opposite side, and remove (protect paintwork surface with adhesive tape first if necessary).

– Pull rubber holder with push-fit bulb off bulb housing.

– Pull push-fit bulb (12 V/5 W) out of socket (do not turn).

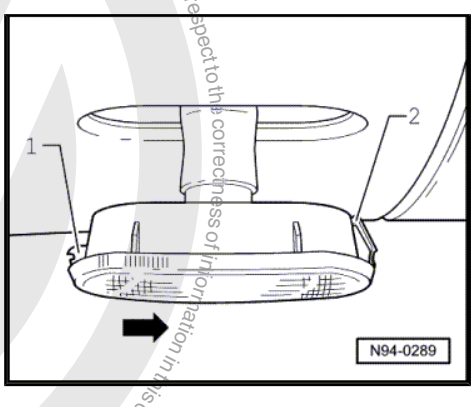

Installing:

– Fit rubber holder with push-fit bulb onto bulb housing.

– Insert turn signal in wing.

– After installing a new bulb check function of turn signals.

Protected by copyright. Copying for private or commercial purposes, in any form or medium, is not permitted without the prior written consent of Volkswagen AG. Volkswagen AG does not guarantee or accept any liability with respect to the correctness of information in this document. Copyright by Volkswagen AG.
satelettronica

5 Tail lights

5.1 Assembly overview - tail light (Polo Classic)

Note

- *To disconnect and connect the battery, the procedure described in the workshop manual should be strictly adhered to* *⇒ page 70*
- *If vehicle has a security-coded radio, obtain anti-theft code before disconnecting battery.*

1 - Housing

2 - Rear fog light bulb
- ❑ 12 V/21 W.
- ❑ For right-hand tail lights, reversing light bulb 12 V / 21 W

3 - Tail light bulb
- ❑ 12 V/5 W.

4 - Brake light bulb
- ❑ 12 V/21 W.

5 - Turn signal bulb
- ❑ 12 V/21 W.

6 - Bulb holder
- ❑ Removing ⇒ page 127

7 - Seal

8 - M5 hexagon nuts

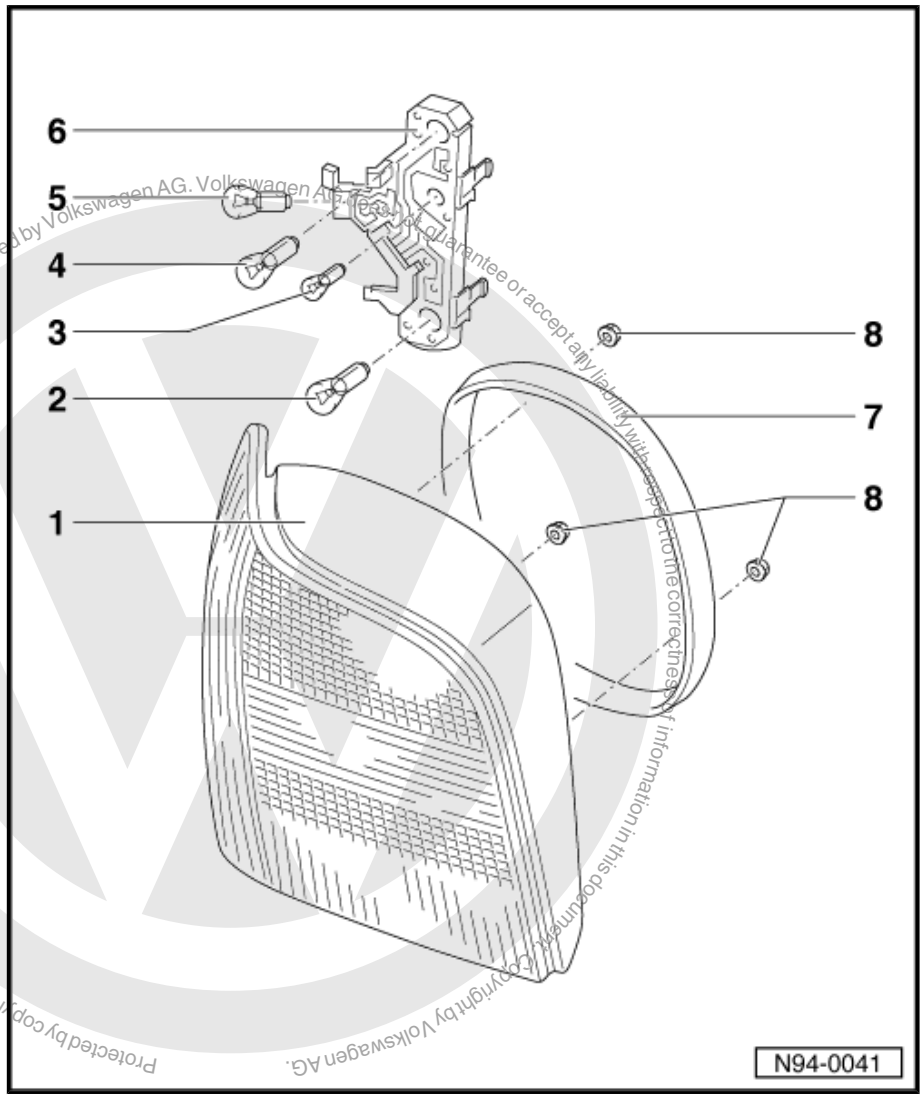

Protected by copyright. Copying for private or commercial purposes, part or in whole, is not permitted unless authorised by Volkswagen AG. Volkswagen AG does not guarantee or accept any liability with respect to the correctness of information in this document. Copyright by Volkswagen AG.
satelettronica

5.2 Assembly overview - tail light (Polo Variant)

Note

- *To disconnect and reconnect the battery, the procedure described in the workshop manual should be strictly adhered to* *⇒ page 70* *.*
- *If vehicle has a security-coded radio, obtain anti-theft code before disconnecting battery.*

1 - Housing

2 - M5 hexagon nuts

3 - Rear fog light bulb
- ❑ Vacant on right-hand tail light

4 - Bulb holder
- ❑ Removing ⇒ page 127

5 - Tail light bulb
- ❑ 12 V/5 W.

6 - Twin-filament bulb for brake and tail light
- ❑ 12 V/21 W/5 W

7 - Reversing light bulb
- ❑ 12 V/21 W.

8 - Turn signal bulb
- ❑ 12 V/21 W.

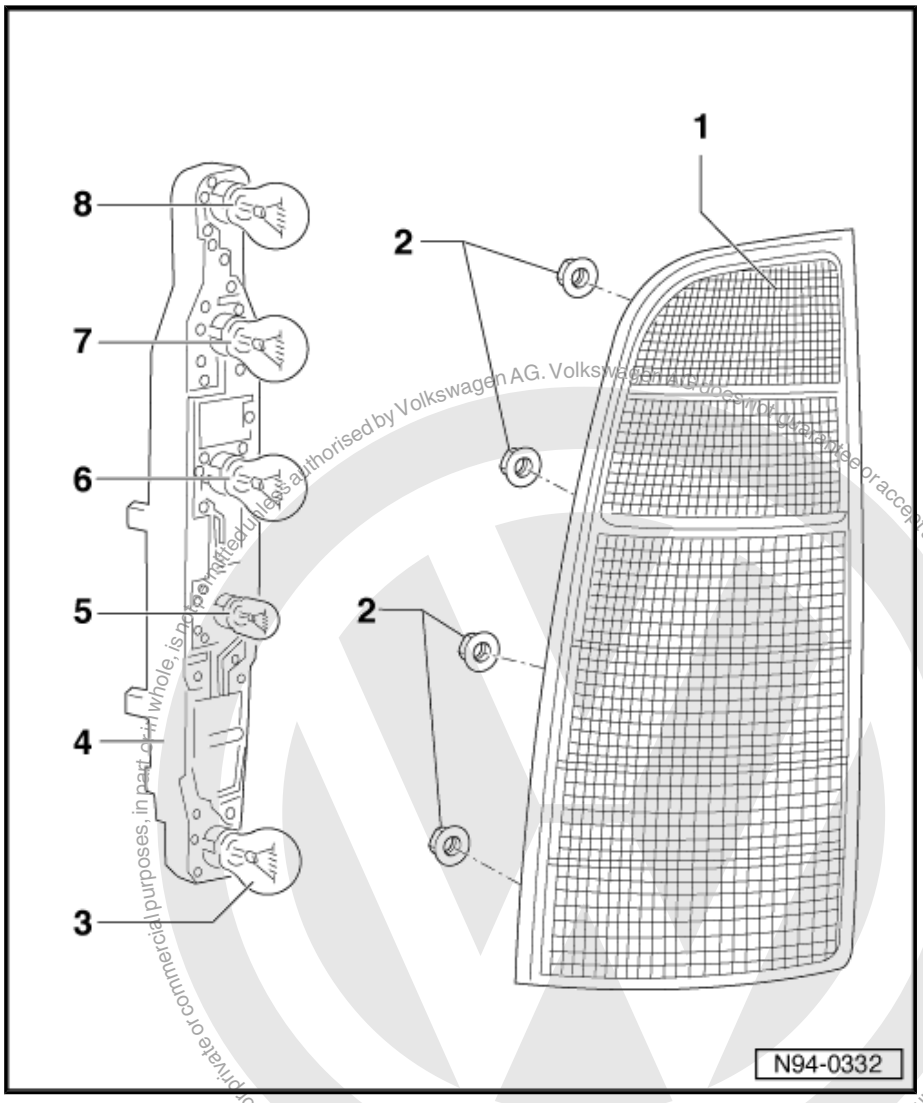

Protected by copyright. Copying for private or commercial purposes, in part or in whole, is not permitted unless authorised by Volkswagen AG. Volkswagen AG does not guarantee or accept any liability with respect to the correctness of information in this document. Copyright by Volkswagen AG.
satelettronica

5.3 Removing and installing tail light bulb holder (Polo Variant)

Removing:

– Release retaining lugs -arrows- and take out bulb holder.

– Disconnect connector.

Installing:

Install in reverse order of removal.

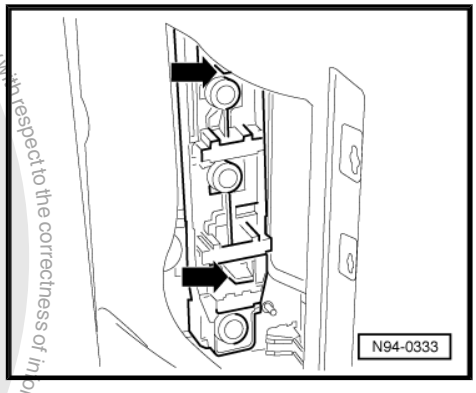

5.4 Removing and installing tail light bulb holder (Polo Classic)

Removing:

– Release retaining lugs -arrows- and take out bulb holder.

– Disconnect connector.

Installing:

Install in reverse order of removal.

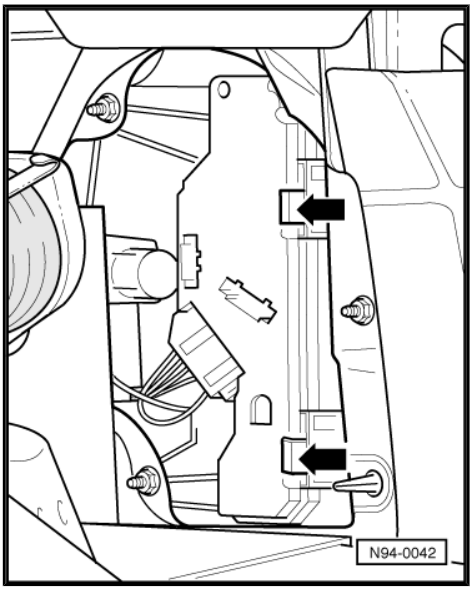

satelettronica

6 Number plate lights

6.1 Removing and installing number plate light

Removing:

– Remove securing screws -arrows- for number plate light.
– Pull number plate light out.
– Disconnect connector.

Installing:

Install in reverse order of removal.

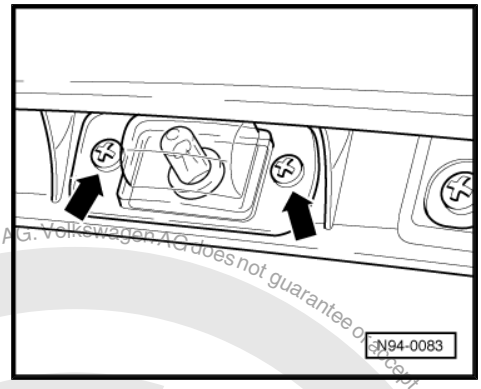

6.2 Replacing number plate light bulb

– Remove number plate light ⇒ page 128 .
– Pull out glass base bulb (12 V/5 W) -arrow-, do not turn.
– Push in new bulb, fit cover and tighten securing screws.

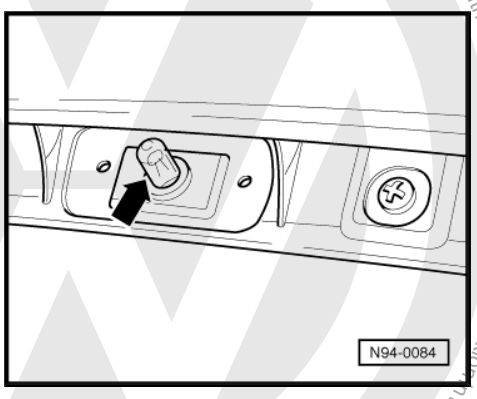

Protected by copyright. Copying for private or commercial purposes, in part or in whole, is not permitted unless authorised by Volkswagen AG. Volkswagen AG does not guarantee or accept any liability with respect to the correctness of information in this document. Copyright by Volkswagen AG.
satelettronica

7 Additional brake lights

7.1 Additional brake light (Polo Classic)

7.1.1 Removing and installing bulb holder

Removing:

– Remove rear roof trim ⇒ General body repairs, interior; Rep. Gr. 70 ; Roof trims .

– Press retaining springs -arrows- towards rear window and take out bulb holder downwards.

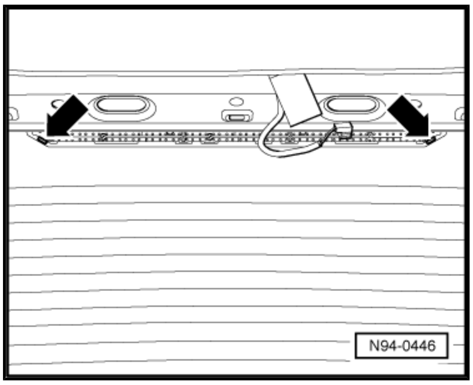

Note

On the bulb holder there is a circuit board with 28 soldered LEDs which are covered by a plastic strip. Changing an individual LED is not possible, the bulb holder must be renewed complete in cases of repair.

Installing:

Install in reverse order of removal.

7.2 Additional brake light (Polo Variant)

The additional brake light is secured to the rear lid.

7.2.1 Removing and installing bulb holder

Removing:

– Unclip lower half of additional brake light housing downwards -arrows- and fold away.

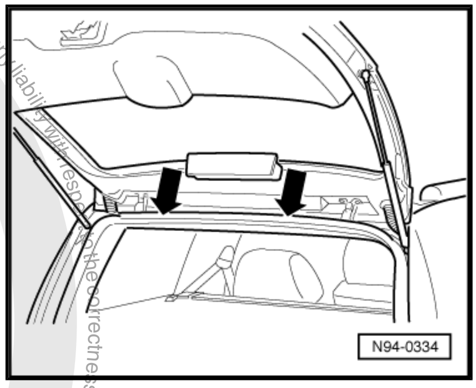

– Pull off connector and unclip bulb holder to rear -arrows-.

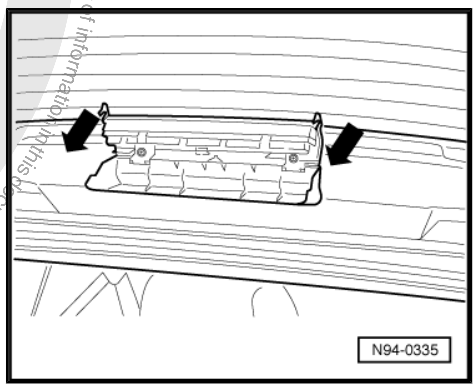

Note

On the bulb holder there is a circuit board with 10 soldered bulbs which are covered by a plastic strip. Changing an individual bulb is not possible, the bulb holder must be renewed complete in cases of repair.

Installing:

Install in reverse order of removal.

Protected by copyright. Copying for private or commercial purposes, in part or in whole, is not permitted unless authorised by Volkswagen AG. Volkswagen AG does not guarantee or accept any liability with respect to the correctness of information in this document. Copyright by Volkswagen AG.

sateletronica

7.2.2 Removing and installing additional brake light housing

Removing:

– Unscrew securing screws -arrows- and remove additional brake light.

Installing:

Install in reverse order of removal.

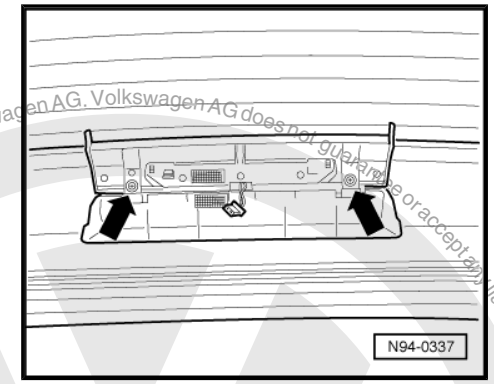

Protected by copyright. Copying for private or commercial purposes, in part or in whole, is not permitted unless authorised by Volkswagen AG. Volkswagen AG does not guarantee or accept any liability with respect to the correctness of information in this document. Copyright by Volkswagen AG.
satelettronica

8 Steering column switch and ignition and starter switch

8.1 Assembly overview - steering column

Note

- *Further information for working on steering column ⇒ Running gear, axles, steering; Rep. Gr. 48 ; Airbag, steering wheel, steering column .*
- *Instructions for working on vehicles fitted with an airbag ⇒ General body repairs, interior; Rep. Gr. 69 ; Airbag .*

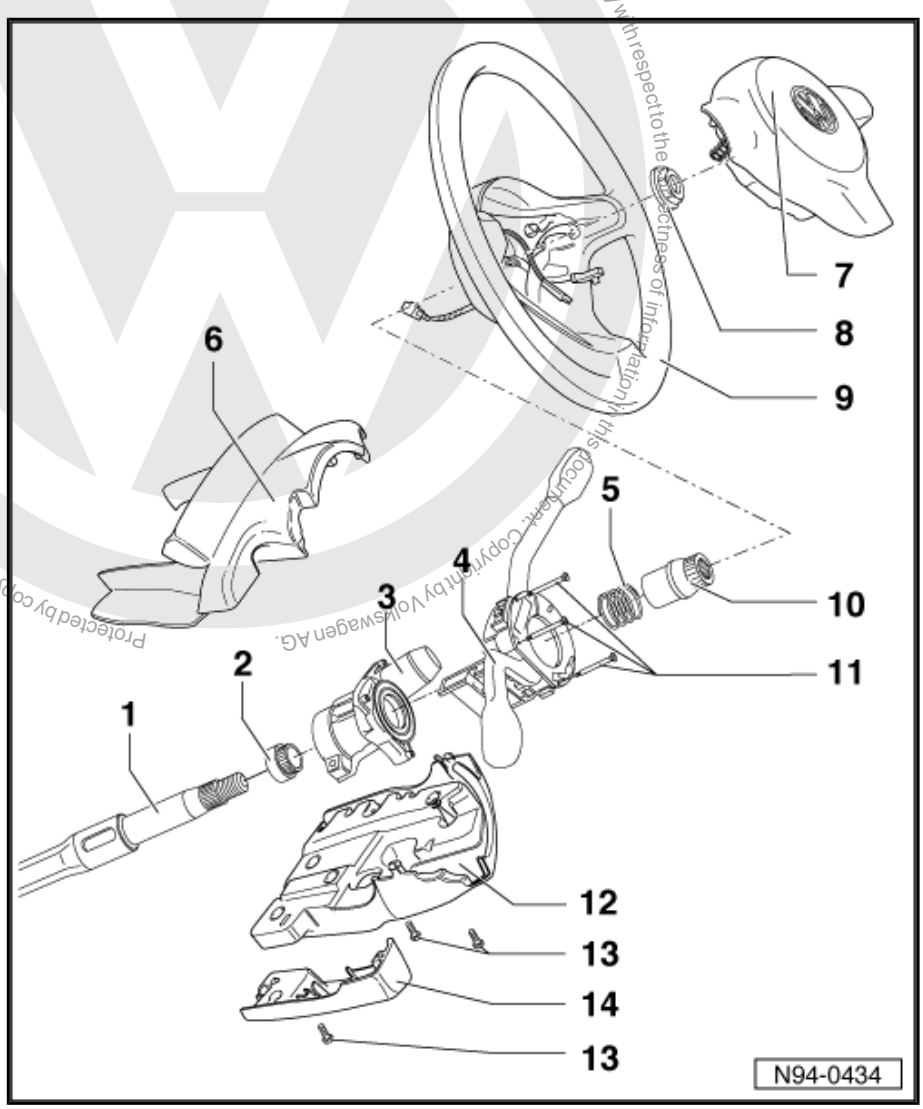

1 - Steering column

2 - Support ring

3 - Steering column lock housing

- ❑ Removing and installing ⇒ page 134
- ❑ Removing and installing lock cylinder ⇒ page 136

4 - Steering column switch

- ❑ For turn signals, main and dipped beam, headlight flasher, parking lights, windscreen wiper wash/wipe control and rear window wiper
- ❑ Removing and installing ⇒ page 132

5 - Spring

6 - Trim - upper part

7 - Airbag unit

- ❑ Removing and installing ⇒ General body repairs, interior; Rep. Gr. 69 ; Airbag

8 - Hexagon nut

- ❑ 50 Nm

9 - Steering wheel

- ❑ Grease slip ring for horn operation ⇒ page 132

10 - Multi-point adapter sleeve

11 - Steering column switch securing screws

12 - Trim - middle lower part

13 - Securing screws for trim upper and lower parts

14 - Trim - left lower part

Protected by copyright. Copyright by Volkswagen AG. Volkswagen AG does not guarantee or accept any liability with respect to the correctness of information in this document. Copyright by Volkswagen AG.
satelettronica

Slip ring for horn operation

– Lubricate slip ring -arrow- with G 000 400 grease.

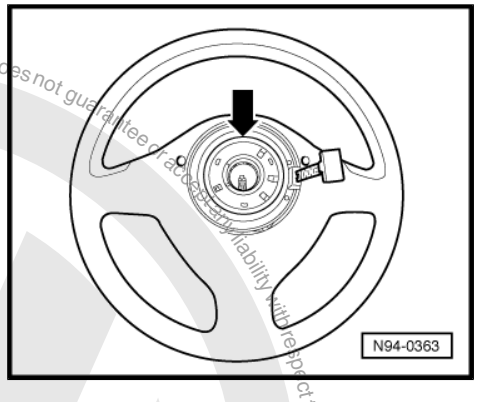

8.2 Removing and installing steering column switch

Special tools and workshop equipment required

♦ Torque wrench -V.A.G 1331-

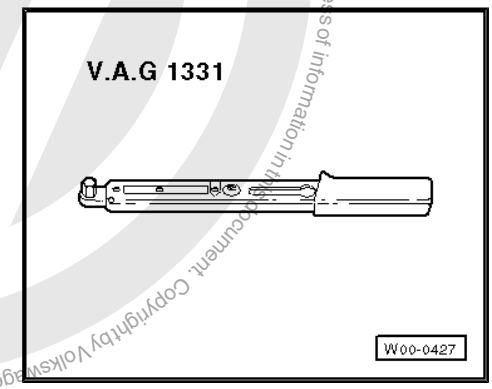

Protected by copyright. Copying for private or commercial purposes, in part or in whole, is not permitted unless authorised by Volkswagen AG. Volkswagen AG does not guarantee or accept any liability with respect to the correctness of information in this document. Copyright by Volkswagen AG.

Note

♦ *To disconnect and reconnect the battery, the procedure described in the workshop manual should be strictly adhered to* *⇒ page 70* *.*

♦ *If vehicle has a security-coded radio, obtain anti-theft code before disconnecting battery.*

Removing:

– Disconnect battery ⇒ page 70 .

– Remove driver side airbag ⇒ General body repairs, interior; Rep. Gr. 69 ; Airbag .

– Remove cross-head screws -1-.

– Remove lower trim -2- and side trim -3- for steering column switch .

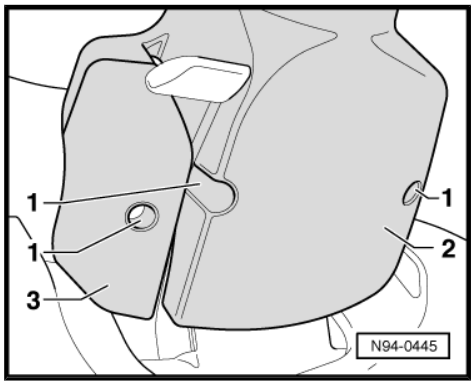

satelettronica

– Detach connector -arrow- from canceling unit.

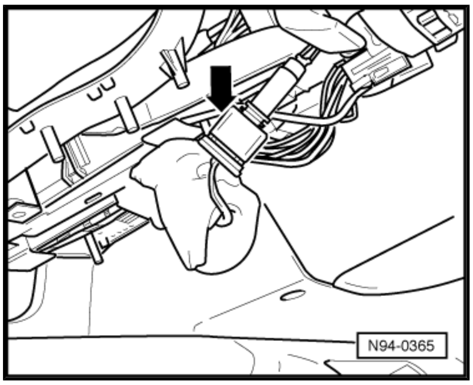

– Remove hexagon nut (50 Nm) -2-.

– Position steering wheel -1- in central position (wheels straight ahead).

– Pull steering wheel -1- off steering column.

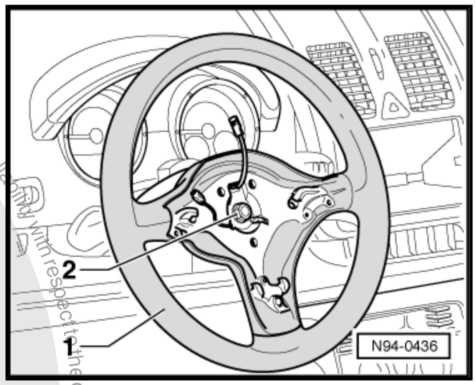

– Take off upper steering column switch trim -1-.

– Remove securing bolts -arrows-.

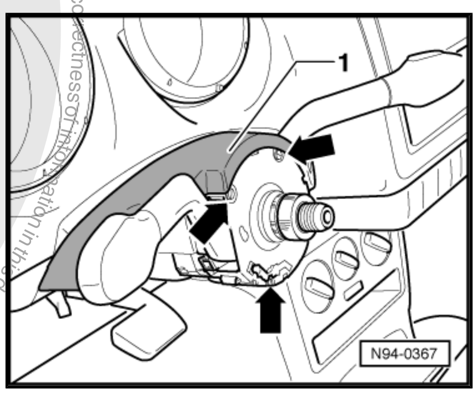

– Pull connectors -arrows- off steering column switch.

– Remove connector housing -1- downwards out of guide on steering lock housing.

– Remove steering column switch.

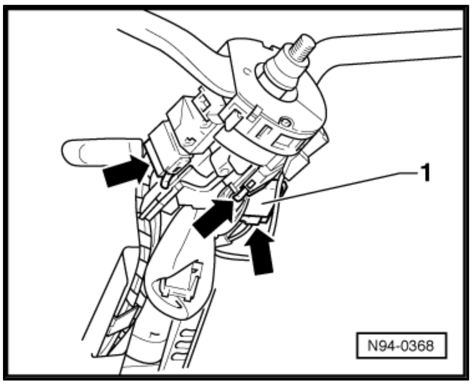

Installing:

Installation is carried out in the reverse order. When installing observe the following:

– Install driver side airbag ⇒ General body repairs, interior; Rep. Gr. 69 ; Airbag .

Protected by copyright. Copying for private or commercial purposes, in part or in whole, is not permitted unless authorised by Volkswagen AG. Volkswagen AG does not guarantee or accept any liability with respect to the correctness of information in this document. Copyright by Volkswagen AG.

sateletronica

8.3 Pin assignment on steering column switch

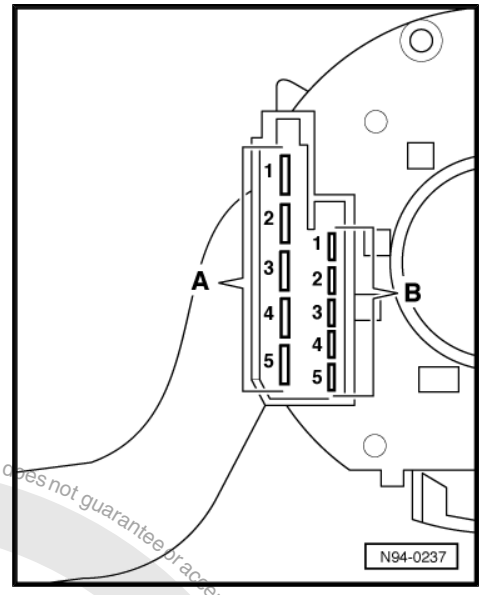

5-pin connector -A-

1 - Not assigned

2 - Switch for dip beam/headlight flasher - terminal 56b

3 - Switch for dip beam and headlight flasher - terminal 56

4 - Switch for dip beam/headlight flasher - terminal 56a

5 - Switch for dip beam and headlight flasher - terminal 30

5-pin connector -B-

1 - Windscreen wiper switch - terminal 53b

2 - Windscreen wiper switch - terminal 53a

3 - Windscreen wiper switch - terminal 53

4 - Windscreen wiper switch - terminal 53e

5 - Windscreen wiper switch - intermittent operation

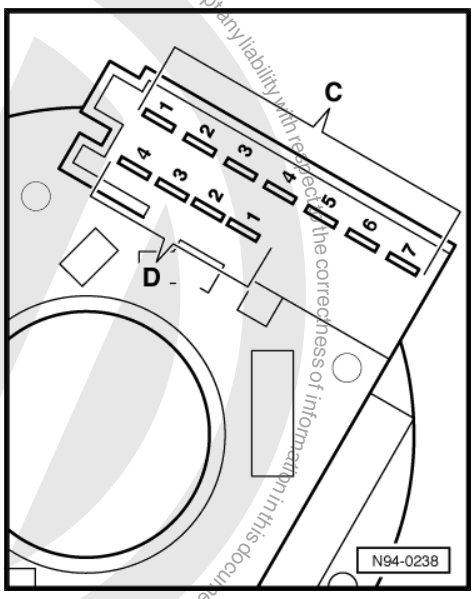

7-pin connector -C-

1 - Horn plate - terminal 71

2 - Turn signal switch - terminal 49a

3 - Turn signal switch - terminal L

4 - Parking light switch - terminal PL

5 - Parking light switch - terminal P

6 - Parking light switch - terminal PR

7 - Turn signal switch - terminal R

4-pin connector -D-

1 - Windscreen wiper switch - rear window wiper

2 - Windscreen wiper switch - flick wipe

3 - Windscreen wiper switch - terminal 31

4 - Windscreen wiper switch - terminal 15, not used

8.4 Removing and installing steering lock housing

Special tools and workshop equipment required

- Puller (e.g. Kukko 204/2)

Note

- *To disconnect and reconnect the battery, the procedure described in the workshop manual should be strictly adhered to* *⇒ page 70* *.*
- *If vehicle has a security-coded radio, obtain anti-theft code before disconnecting battery.*

Removing:

– Remove steering column switches ⇒ page 132 .

Protected by copyright. Copying for private or commercial purposes, in part or in whole, is not permitted unless authorised by Volkswagen AG. Volkswagen AG does not guarantee or accept any liability with respect to the correctness of information in this document. Copyright by Volkswagen AG.
satelettronica

– Remove screw -1- and take off cover -2-.

– Remove screws -arrows- from driver side storage compartment -3-.

– Take out driver side storage compartment -3-.

– Pull multi-pin connector off ignition and starter switch.

– Carefully pull immobilizer reader coil connector off immobilizer control unit and unclip from cable channel on steering column.

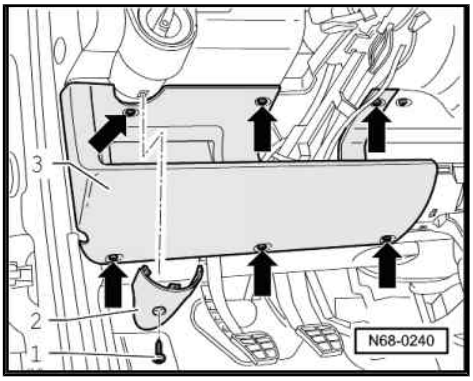

Vehicles with automatic gearbox:

– Pull clip off and unclip locking cable for ignition key removal lock.

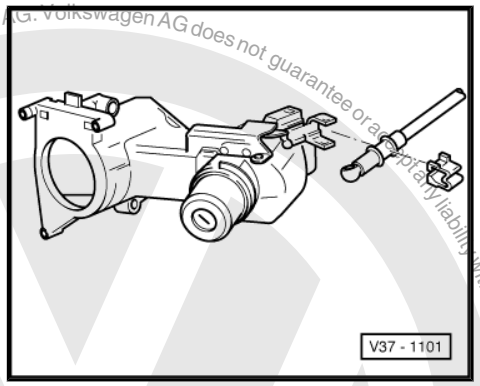

Continuation for all vehicles:

– Drill out shear-head bolt -1- or chisel off if necessary.

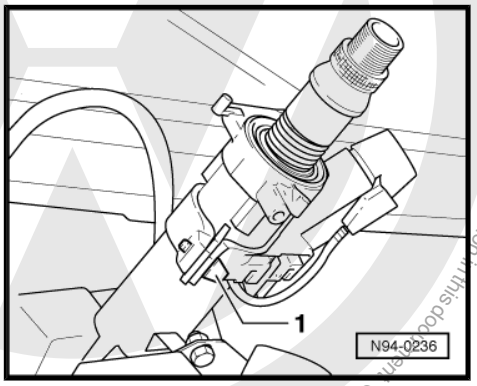

> ⚠ **WARNING**
>
> *Wear eye protection.*

Note

On some vehicles, a hexagon key head bolt is installed instead of a shear-head bolt.

– Pull off multi-point adapter sleeve with commercially available puller -1- (e.g. Kukko 204/2).

– Pull steering lock housing and spring off column tube and steering column.

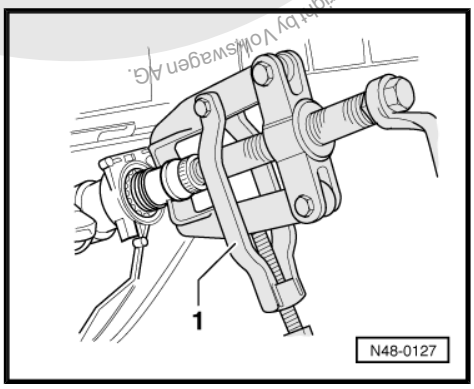

Installing:

– Push steering column lock and spring onto steering column (note fitted position) and loosely screw in shear-head bolt.

– Remove ignition key and engage steering lock.

Protected by copyright. Copying for private or commercial purposes, in part or in whole, is not permitted unless authorised by Volkswagen AG. Volkswagen AG does not guarantee or accept any liability with respect to the correctness of information in this document. Copyright by Volkswagen AG.
satelettronica

– Place multi-point adapter on steering column and screw hexagon nut onto steering column.
– Tighten hexagon nut on steering column to 50 Nm.
– Remove nut again.
– Connect multi-pin connector to ignition switch.
– Tighten shear-head bolt for steering lock housing until head shears off.

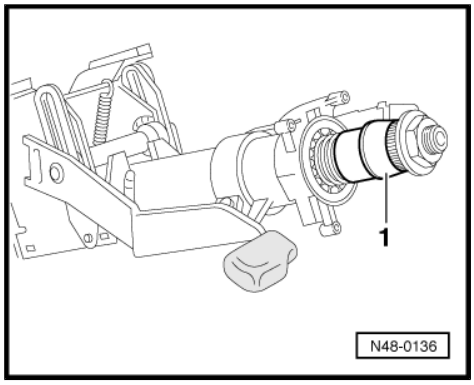

Note

On some vehicles, a hexagon key head bolt is installed instead of a shear-head bolt.

Vehicles with automatic gearbox:

– Fit locking cable clip onto locking cable.
– Press locking cable onto ball head.
– Press locking cable with clip into ignition switch support bracket.

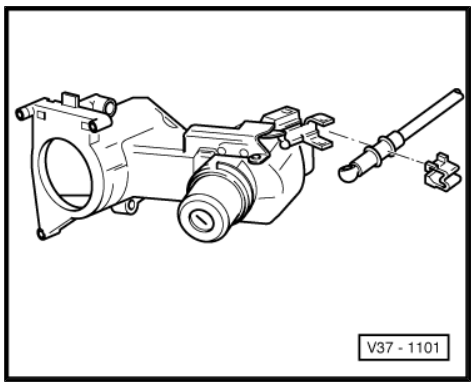

Continuation for all vehicles:

– Install steering column switch ⇒ page 132 .
– Install driver storage compartment.

8.5 Removing and installing lock cylinder

Removing:

– Remove steering lock housing ⇒ page 134 .
– Mark drilling hole on steering lock housing.

a - 9.5 mm

b - 10 mm

– Drill into steering lock housing (approx. 3 mm), until the lock cylinder spring is evident.
– Using opposite end of drill compress lock spring and pull out lock cylinder.

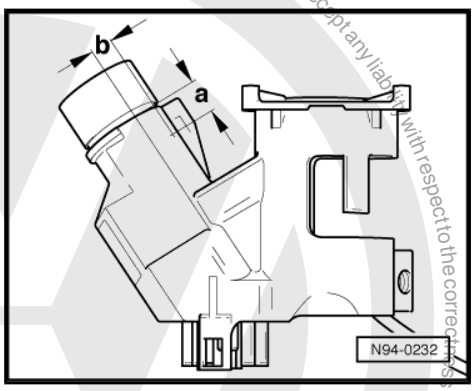

Installing:

Caution

Steering lock housing which has been drilled must not be installed again.

– Push lock cylinder into new steering lock housing.
– By slightly turning key in lock cylinder it can be pushed in onto stop.
– Install steering lock housing ⇒ page 134 .

Protected by copyright. Copyright by Volkswagen AG. Copying for commercial purposes, in part or whole is not permitted unless authorised by Volkswagen AG. Volkswagen AG does not guarantee or accept any liability with respect to the correctness of information in this document.
satelettronica

8.6 Removing and installing ignition / starter switch

Note

- *To disconnect and reconnect the battery, the procedure described in the workshop manual should be strictly adhered to* *⇒ page 70* *.*
- *If vehicle has a security-coded radio, obtain anti-theft code before disconnecting battery.*

Removing:

– Disconnect battery ⇒ page 70 .

– Remove steering lock housing ⇒ page 134 .

– Remove securing screw -arrow- and pull ignition and starter switch out of steering lock housing.

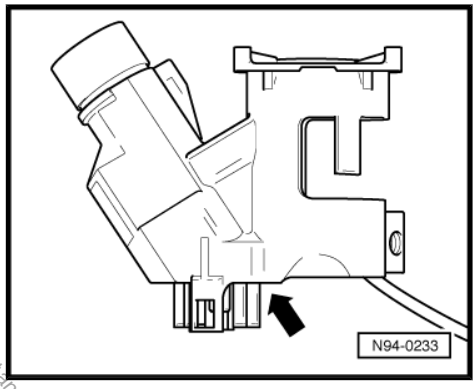

Installing:

– Push ignition switch into steering lock housing.

Note

When installing the ignition switch ensure that the ignition switch and the lock cylinder are in the same position, e.g. "ignition on".

– Tighten securing screw.

– Install steering lock housing ⇒ page 134 .

8.7 Pin assignment for ignition switch

8-pin connector

1 - Terminal 50

2 - Terminal 15

3 - Terminal X

4 - Terminal S

5 - Terminal 30

6 - Terminal P

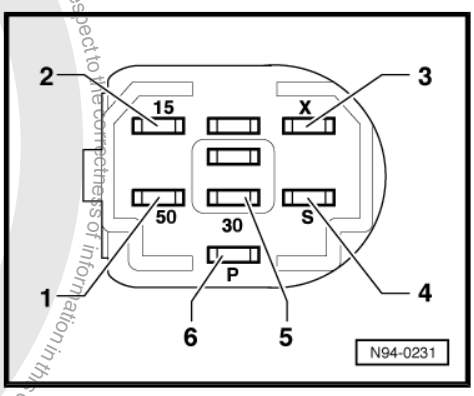

Protected by copyright. Copying for private or commercial purposes, in part or in whole, is not permitted unless authorised by Volkswagen AG. Volkswagen AG does not guarantee or accept any liability with respect to the correctness of information in this document. Copyright by Volkswagen AG.
satelettronica

96 – Lights, bulbs, switches - interior

1 Immobilizer

1.1 Assembly overview - immobilizer

1 - Immobilizer control unit - J362-

Removing and installing
⇒ page 139

2 - Transponder (response-reader memory) integrated in ignition key

3 - Fuel cut-off valve control unit on diesel injection pump

If defective the complete diesel injection pump with the fuel cut-off valve control unit is to be replaced.

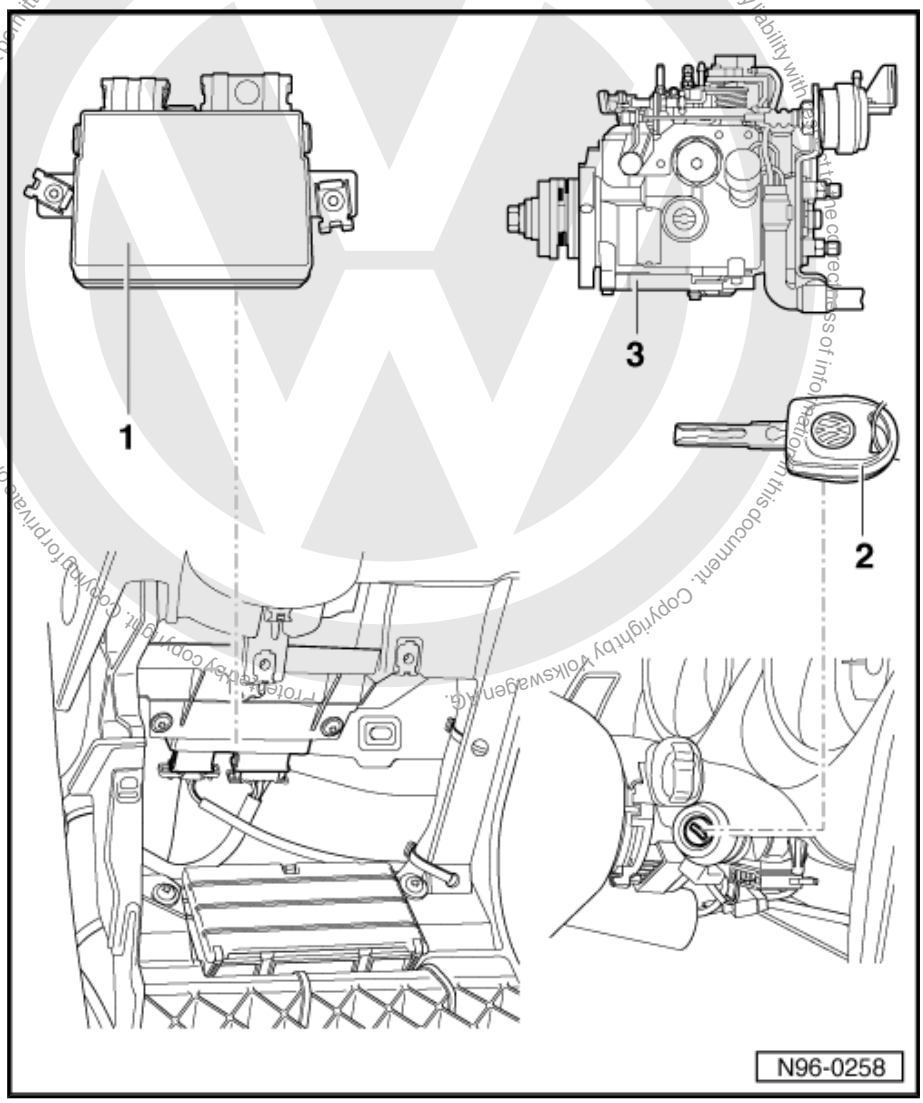

Copyright by Volkswagen AG. Volkswagen AG does not guarantee or accept any liability with respect to the correctness of information in this document. Copyright by Volkswagen AG. Volkswagen AG. Copyright for private or commercial purposes, in part or in whole, is not permitted unless authorised by Volkswagen AG.
satelettronica

1.2 Removing and installing immobilizer control unit

Removing:

– Remove screw -1- and take off cover -2-.

– Remove screws -arrows- from driver side storage compartment -3-.

– Take out driver side storage compartment -3-.

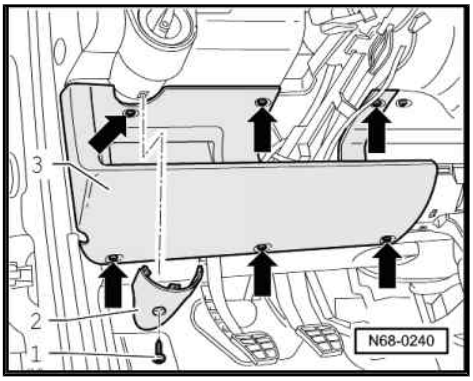

– Remove Torx screws -arrows- which secure the immobilizer control unit.

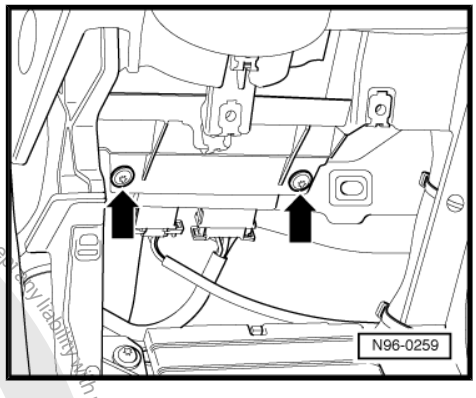

– Pull connectors -arrows- off immobilizer control unit.

– The immobilizer control unit can now be pulled out forwards.

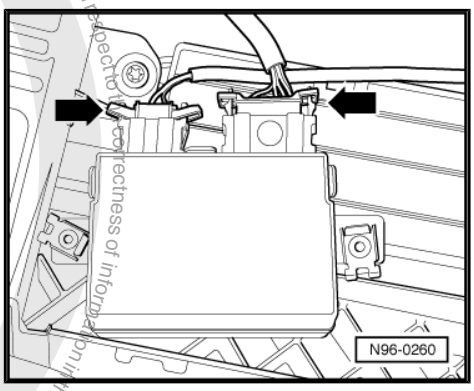

Installing:

Install in reverse order of removal.

1.3 Immobilizer reader coil -D2-

The immobilizer reader coil -D2- is secured to the lock cylinder housing and cannot be changed individually.

1.4 Transponder

Replacement of transponder (response-reader memory) in ignition key is not possible.

The complete key must always be renewed if the transponder is found to be defective ⇒ page 19 .

Copyright by Volkswagen AG. Protected by copyright. Copying for private or commercial purposes, in part or in whole, is not permitted unless authorised by Volkswagen AG. Volkswagen AG does not guarantee or accept any liability with respect to the correctness of information in this document.
satelettronica

2 Interior lights and switches

2.1 Assembly overview - switches in dash panel

1 - Light switch -E1-

- ❑ Removing and installing ⇒ page 140

2 - Headlight range control regulator -E102- with switches and instruments illumination regulator -E20-

- ❑ Removing and installing ⇒ page 141

3 - Hazard warning light switch -E3-

- ❑ Removing and installing ⇒ page 142

4 - Front right window regulator switch -E41-

- ❑ Removing and installing ⇒ page 142

5 - Heated rear window switch -E15-

- ❑ Removing and installing ⇒ page 142

6 - Front left window regulator switch -E40-

- ❑ Removing and installing ⇒ page 142

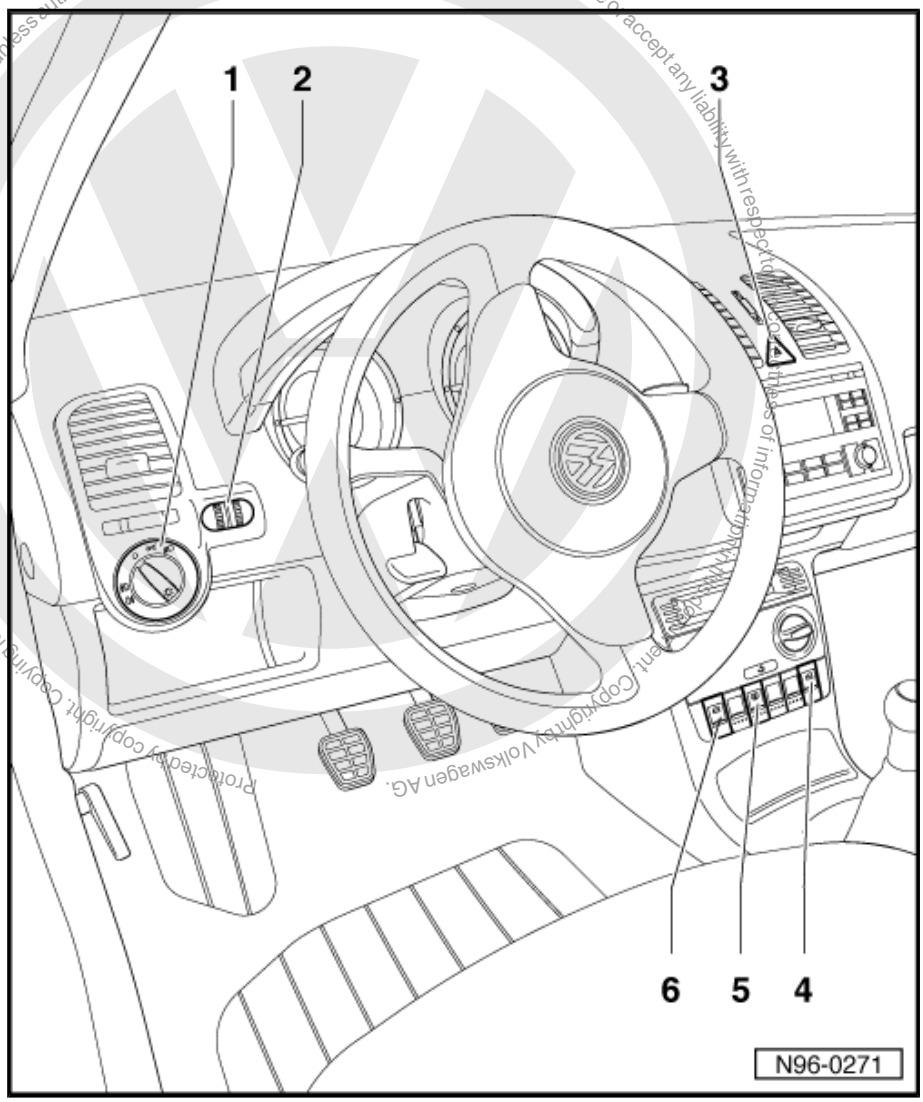

2.2 Removing and installing light switch - E1-

Removing:

– Turn rotary knob part of light switch to “0”.

satelettronica

– Press rotary part of light switch firmly inwards -1- and turn slightly to right -2-.
– Hold grip in this position and pull light switch out of dash panel using grip -3-.
– Release connectors and pull off.

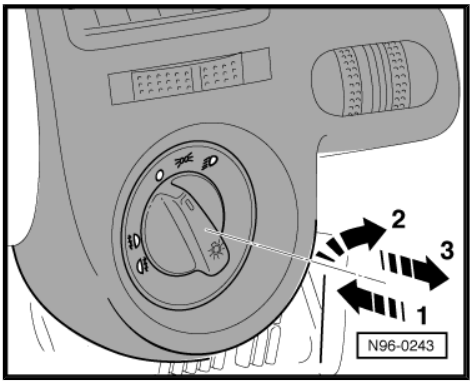

Installing:

– Reconnect connectors.

– Hold light switch and press rotary part of light switch firmly inwards -1- and turn slightly to right -2-
– Hold grip in this position and insert light switch in dash panel -3-.
– Turn rotary knob to “0” position, release and engage switch.

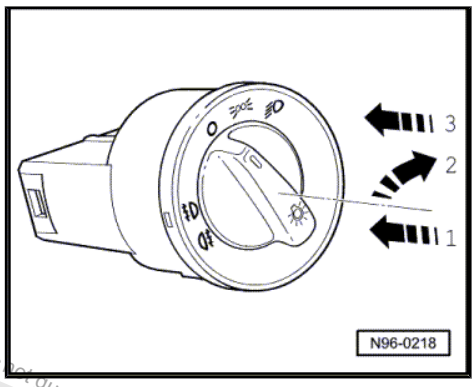

2.3 Removing and installing headlight range control regulator -E102- with switches and instruments illumination regulator -E20-

Removing:

– Remove light switch ⇒ page 140 .
– Remove screw -1- and pivot cover with ventilation grille -2- out of dash panel in -direction of arrow-.
– Pull off connector.

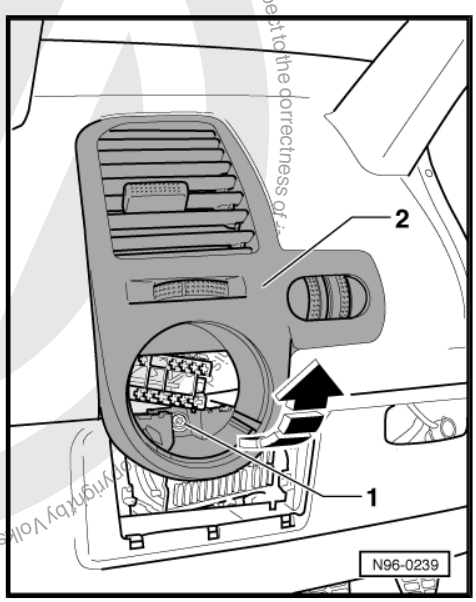

Protected by copyright. Copying for private or commercial purposes, in part or in whole, is not permitted unless authorised by Volkswagen AG. Volkswagen AG does not guarantee or accept any liability with respect to the correctness of ... Copyright by Volkswagen AG.
satelettronica

– Press retaining hooks -arrows- together and pull regulator -1- out of cover -2-.

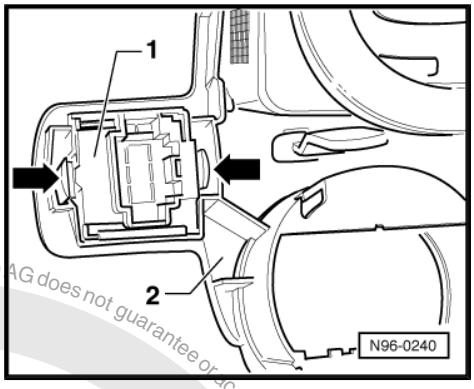

Installing:

Install in reverse order of removal.

2.4 Removing and installing switches in centre of dash panel

The removal and installation procedure is the same for the following switches and is therefore described here for just one switch.

- Heated rear window switch -E15-
- Front left window switch -E40- and front right window switch -E41-
- Heated seat regulator
- Switches for other optional equipment

Removing:

– Insert flat screwdriver between dash panel and switch and carefully release switch.

– Take out switch to the front.

– Pull off connector.

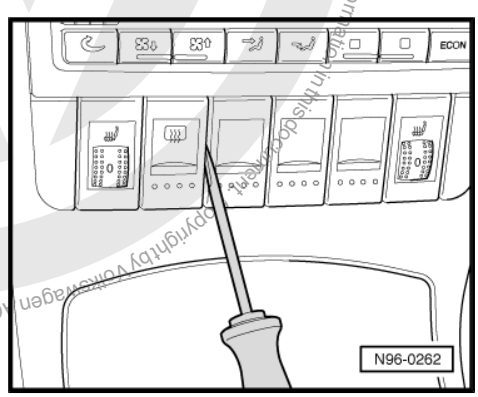

Installing:

Install in reverse order of removal.

2.5 Removing and installing hazard warning light switch -E3-

Removing:

– Remove radio or radio/navigation unit ⇒ Radio, telephone, navigation; Rep. Gr. 91 .

– Remove Torx screws -arrows- and pull middle vent out slightly.

– Pull off connector off hazard warning light switch -E3- .

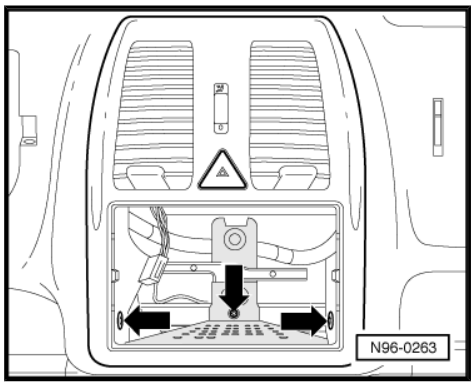

Protected by copyright. Copying for private or commercial purposes, in part or whole is not permitted unless authorised by Volkswagen AG. Volkswagen AG does not guarantee or accept any liability with respect to the correctness of information in this document. Copyright by Volkswagen AG.
satelettronica

– Push spring clip down on lugs -arrows- and push hazard warning light switch -1- out to rear.

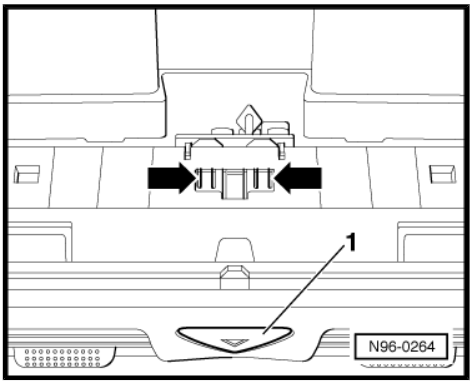

Installing:

Install in reverse order of removal.

2.6 Interior light

2.6.1 Removing and installing interior light

Removing:

– Lever interior light carefully out of roof trim using a flat blade screwdriver.

– Release connector and pull off.

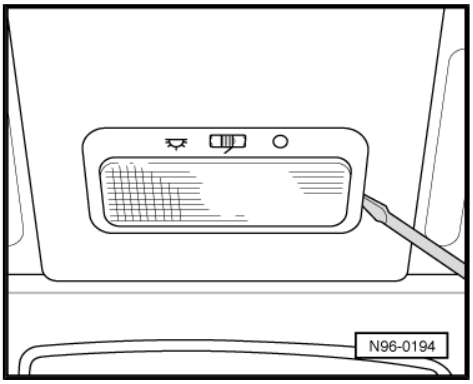

Installing:

Install in reverse order of removal.

2.6.2 Replacing interior light bulb

– Remove interior light ⇒ page 143 .

– Release bulb cover by pressing sides and slide off to side -arrow-.

– Replace 12 V/10 W festoon bulb.

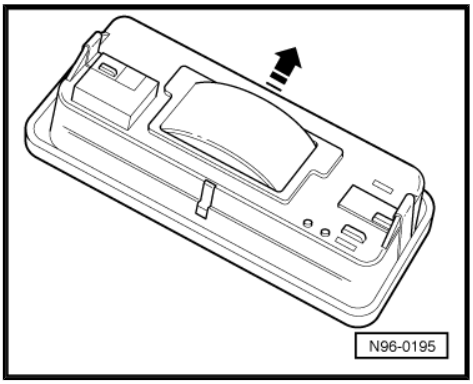

Protected by copyright. Copying for private or commercial purposes, in part or in whole, is not permitted unless authorised by Volkswagen AG. Volkswagen AG does not guarantee or accept any liability with respect to the correctness of information in this document. Copyright by Volkswagen AG.
satelettronica

2.7 Removing and installing glove compartment light -W6-

Removing:

– Insert flat-blade screwdriver behind top of lens and carefully lever lens out.

– Pull out lens with bulb holder and microswitch

– Replace festoon bulb (12 V/3 W)

Installing:

– Insert lens with bulb holder and microswitch in storage compartment and locate correctly.

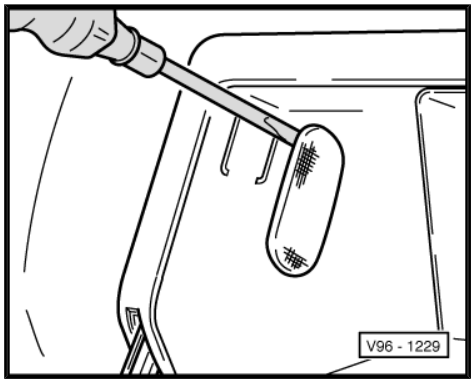

Note

After working on the glove compartment light, a functional check of the switch must be carried out. With the lid closed the lamp must not light!

2.8 Removing and installing sliding sunroof adjustment regulator -E139-

Removing:

– Remove interior light ⇒ page 143 .

– Remove cover -1- downwards.

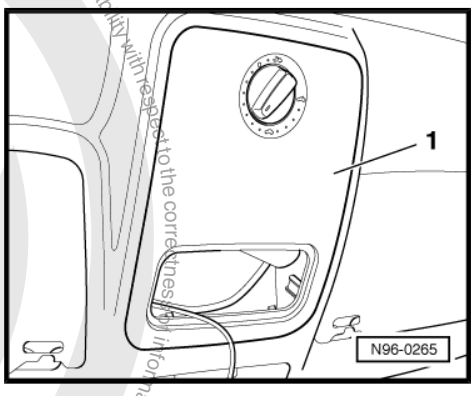

– Remove Torx screws -arrows- and remove sliding sunroof adjustment regulator -E139- -1- downwards.

– Pull off connector.

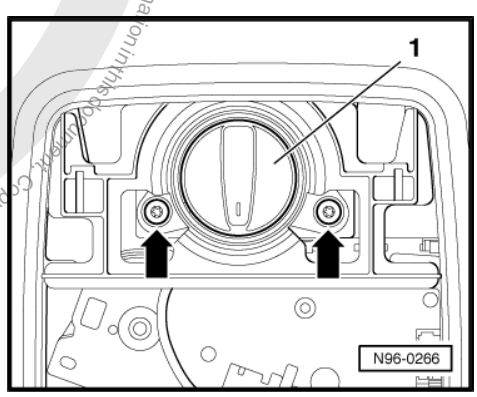

Installing:

Install in reverse order of removal.

Protected by copyright. Copying for private or commercial purposes, in part or in whole, is not permitted unless authorised by Volkswagen AG. Volkswagen AG does not guarantee or accept any liability with respect to the correctness of information in this document. Copyright by Volkswagen AG.

satelettronica

Protected by copyright. Copying for private or commercial purposes, in part or in whole, is not permitted unless authorised by Volkswagen AG. Volkswagen AG does not guarantee or accept any liability with respect to the correctness of information in this document. Copyright by Volkswagen AG.

2.9 Removing and installing mirror adjustment switch -E43- with mirror adjustment change-over switch -E48-

Removing:

– Remove door trim ⇒ General body repairs, interior; Rep. Gr. 70 ; Door trims .

– Release mirror adjustment switch -arrows- and press out to front of door trim.

– Pull off connector.

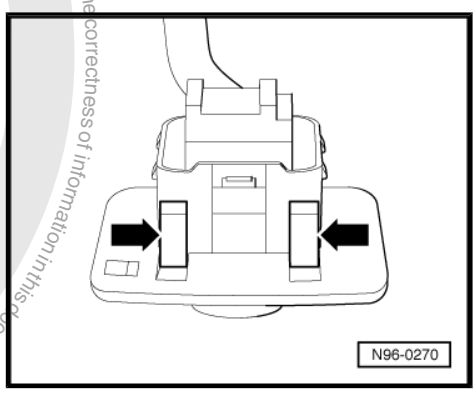

Installing:

Install in reverse order of removal.

2.10 Removing and installing door contact switch

The removal and installation procedure is the same for all door contact switches and is therefore described for just the front passenger door contact switch -F3- .

- Driver door contact switch -F2-
- Front passenger door contact switch -F3-
- Rear left door contact switch -F10-
- Rear right door contact switch -F11-

Removing:

– Pull off rubber seal -arrow-.

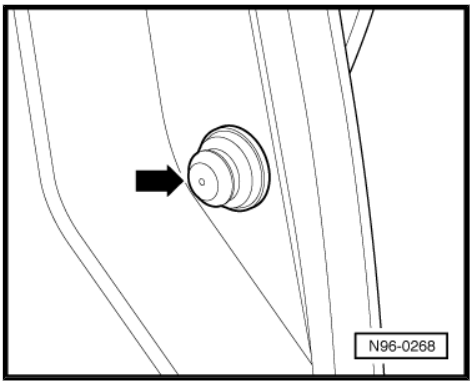

– Carefully release spring tension of door contact switch with a flat-blade screwdriver and pull switch out forwards.

– Pull off connector.

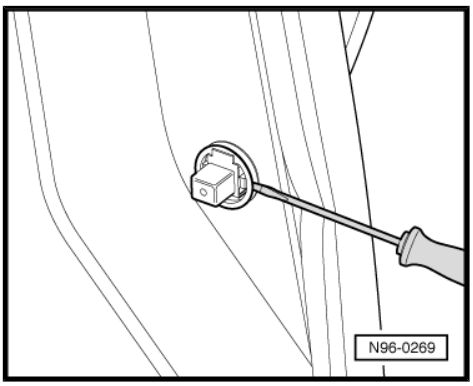

Installing:

Install in reverse order of removal.

satelettronica

2.11 Removing and installing luggage compartment light switch

Note

The switch is located in the rear lid lock.

Removing:

– Remove rear lid lock cylinder ⇒ General body repairs, exterior; Rep. Gr. 55 ; Rear lid (Polo Classic, Polo Variant); Removing and installing lock cylinder .

– Pull off connector.

– Release locating lugs on side with a screwdriver whilst simultaneously pulling switch out of rear lid lock

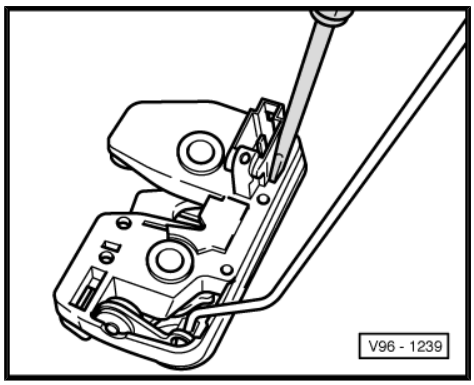

Installing:

– Insert switch in rear lid lock and locate correctly.

– Reconnect connectors.

– Install rear lid lock cylinder ⇒ General body repairs, exterior; Rep. Gr. 55 ; Rear lid (Polo Classic, Polo Variant); Removing and installing lock cylinder .

2.12 Removing and installing luggage compartment light -W3-

Removing:

– Using a screwdriver, push light downwards on light lens until light releases.

– Pull off connector.

– Replace festoon bulb (12 V/3 W)

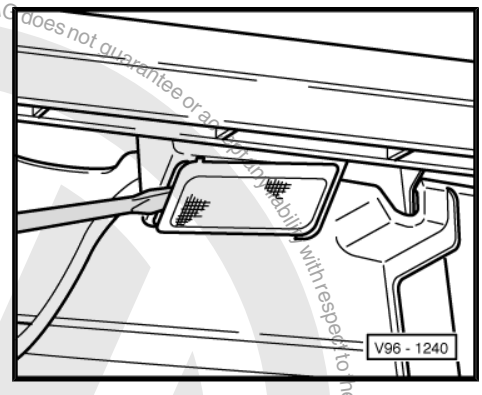

Installing:

Install in reverse order of removal.

Protected by copyright. Copying for private or commercial purposes, in part or in whole, is not permitted unless authorised by Volkswagen AG. Volkswagen AG does not guarantee or accept any liability with respect to the correctness of information in this document. Copyright by Volkswagen AG.

satelettronica

97 – Wiring

1 Removing and installing relay plate, coupling station and fuse holder

Protected copyright. Copyright by Volkswagen AG. Volkswagen AG does not guarantee or assume any liability with respect to the correctness of information in this document. Copyright by Volkswagen AG. Protected copyright. Copyright for private or commercial purposes, in part or in whole, is not permitted unless authorised by Volkswagen AG.

Note

- *To disconnect and reconnect the battery, the procedure described in the workshop manual should be strictly adhered to* *⇒ page 70* *.*
- *If vehicle has a security-coded radio, obtain anti-theft code before disconnecting battery.*

1.1 Removing and installing relay carrier

Removing:

– Disconnect battery ⇒ page 70 .

– Remove screw -1- and take off cover -2-.

– Remove screws -arrows- from driver side storage compartment -3-.

– Take out driver side storage compartment -3-.

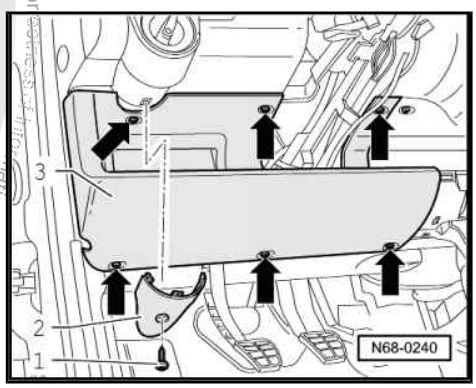

– Unscrew cross-head screws -arrows- and remove lower cover.

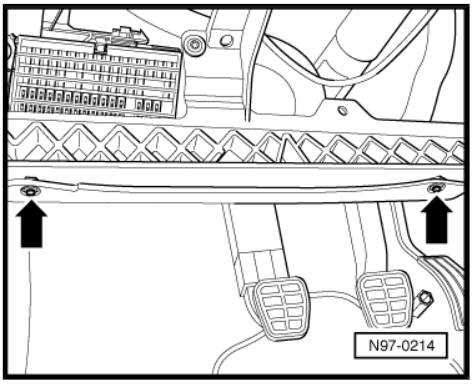

– Remove bolts -arrows- for securing fuse holder.

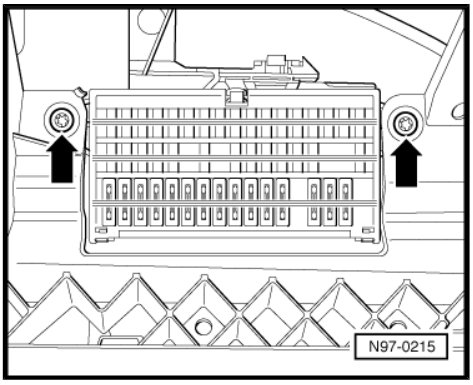

satelettronica

– Pull fuse holder -arrow- downwards slightly.

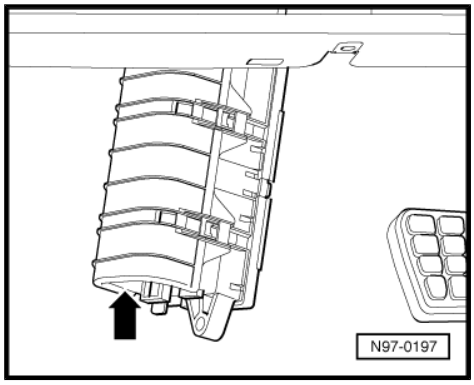

– Remove hexagon nuts -arrows-.
– Pull relays and control units off relay plate.

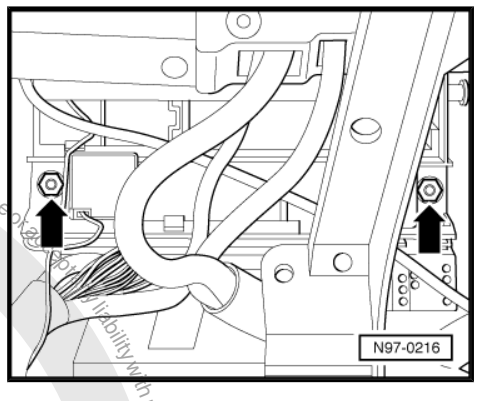

– Press retaining lugs -arrows- outwards and press relay socket to rear out of relay plate.
– Press current distributor to front out of relay plate.
– Take relay plate out downwards.

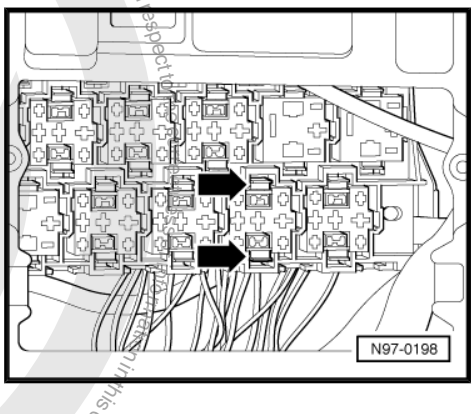

Installing:

– Clip current distributor into relay plate from front.
– Insert relay socket into relay plate from behind and engage.

Note

Relay plate assignment ⇒ Current flow diagrams, Electrical fault finding and Fitting locations.

– Install relays and control units.
– Tighten hexagon nuts -arrows-.

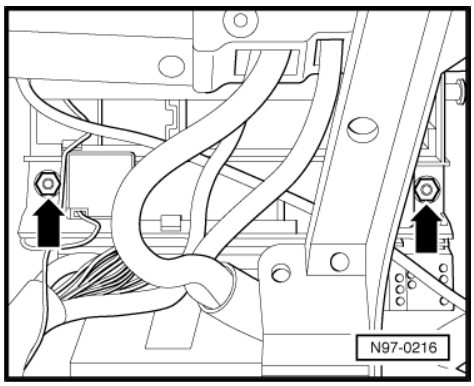

Protected by copyright. Copyright by Volkswagen AG. Volkswagen AG does not guarantee or assume any liability with respect to the contents of this document. Copyright by Volkswagen AG. Volkswagen AG. Volkswagen AG. is not permitted unless authorised by Volkswagen AG. Volkswagen AG does not guarantee or assume any liability with respect to the contents of this document. Copyright by Volkswagen AG.
satelettronica

– Insert fuse holder and secure with screws -arrows-.
– Install lower cover.

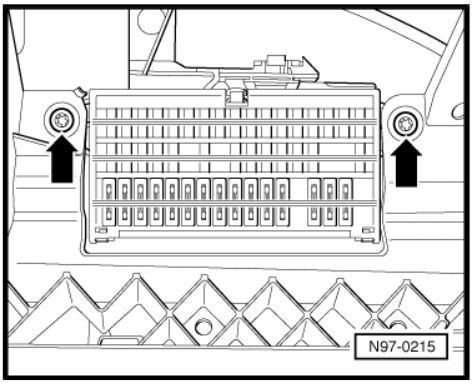

– Install driver side storage compartment -3-.
– Tighten securing screws -arrows- for driver side storage compartment -3-.
– Install cover -2- and tighten screw -1-.
– Connecting battery ⇒ page 70 .

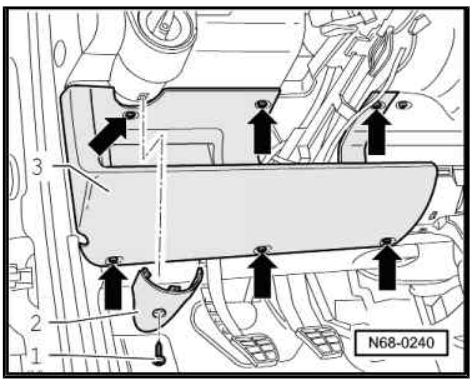

1.2 Removing and installing coupling station behind relay carrier

Removing:

– Remove relay carrier ⇒ page 147 .
– Open securing clips -arrows- and pull coupling station slightly to front.
– Disconnect all multi-pin connectors.

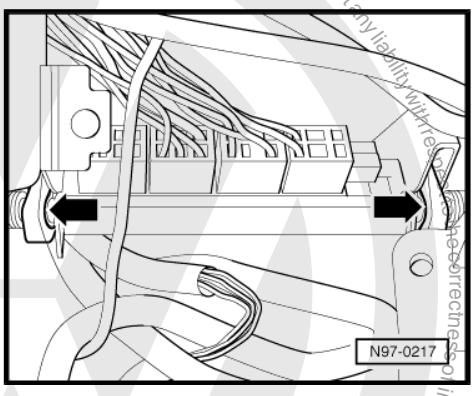

– To unclip multi-pin connector: release retaining lugs -arrows- and push connector -1- out to rear out of coupling station.
– Take coupling station out downwards.

Installing:

– Install multi-pin connector and insert coupling station.

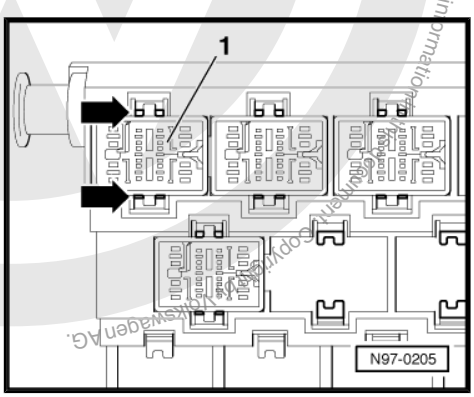

Note

Multi-pin connector pin assignment ⇒ Current flow diagrams, Electrical fault finding and Fitting locations

Protected by copyright. Copyright for private commercial purposes, in part or in whole, is not permitted unless authorised by Volkswagen AG. Volkswagen AG does not guarantee or accept any liability with respect to the correctness of information.
Copyright by Volkswagen AG.
satelettronica

– Secure securing clips -arrows-.
– Install relay carrier ⇒ page 147 .

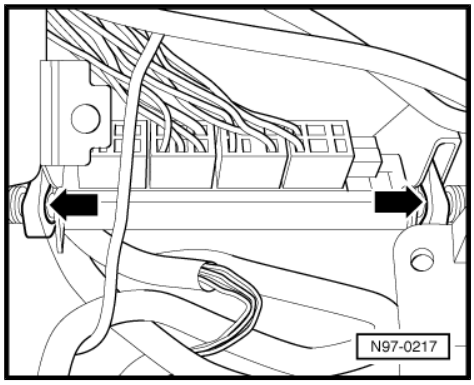

1.3 Removing and installing fuse holder in front left footwell

Removing:

– Disconnect battery ⇒ page 70 .
– Remove screw -1- and take off cover -2-.
– Remove screws -arrows- from driver side storage compartment -3-.
– Take out driver side storage compartment -3-.

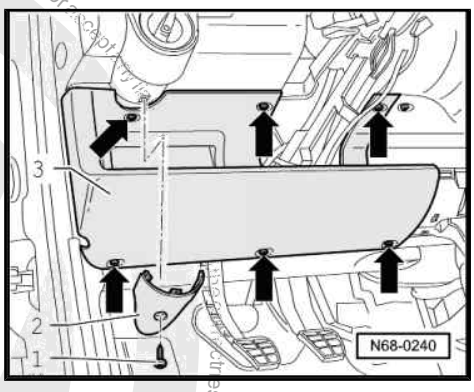

– Unscrew cross-head screws -arrows- and remove lower cover.

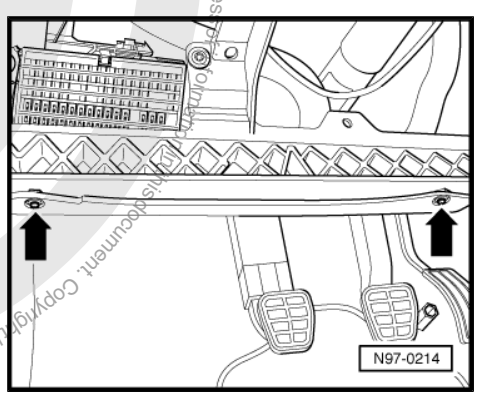

– Remove bolts -arrows- for securing fuse holder.

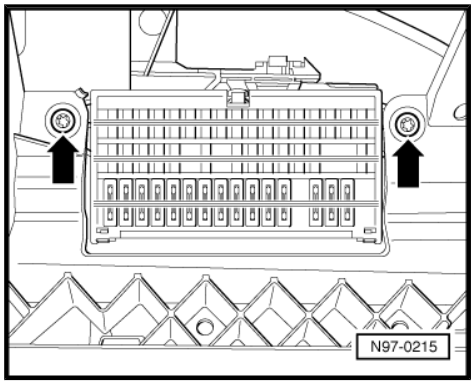

Protected by copyright. Copying for private or commercial purposes, in part or in whole, is not permitted unless authorised by Volkswagen AG. Volkswagen AG does not guarantee or accept any liability with respect to the correctness of information in this document. Copyright by Volkswagen AG.
satelettronica

– Pull fuse holder -arrow- downwards slightly.

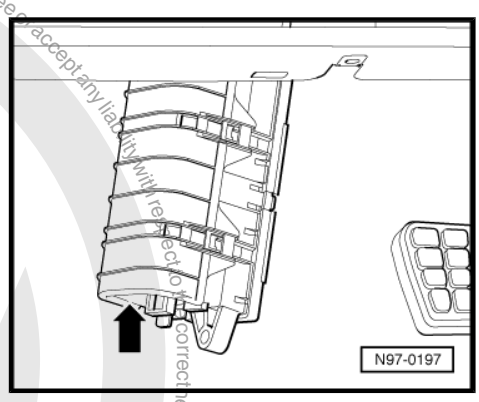

– Press locking lugs -arrows- together and remove cover -1-.
– Take fuses out of fuse holder.

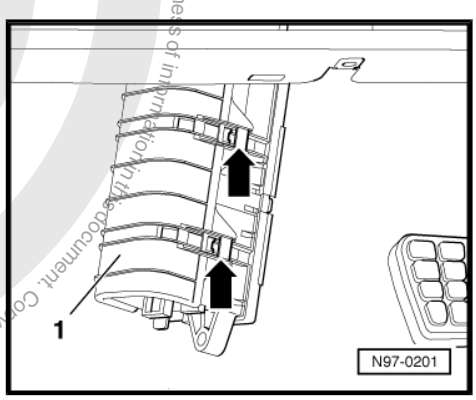

– Pull locking slide -arrows- on the back of the fuse holder out of housing onto stop.
– Pull wiring out of fuse holder.

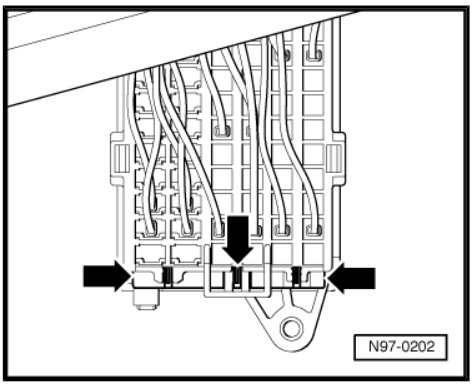

Installing:

Installation is carried out in the reverse order. When installing observe the following:

Note

Fuse holder assignment ⇒ Current flow diagrams, Electrical fault finding and Fitting locations.

– Connecting battery ⇒ page 70 .

Protected by copyright. Copying for private or commercial purposes, in part or in whole, is not permitted unless authorised by Volkswagen AG. Volkswagen AG does not guarantee or accept any liability with respect to the correctness of information in this document. Copyright by Volkswagen AG.

satelettronica

2 Wiring harness and connector repairs

2.1 Notes on safety

Caution

For repair work on airbag and seat belt tensioner wiring harnesses, only contacts, connectors and wiring designed specifically for this purpose may be used ⇒ Parts catalogue!

- Observe country-specific regulations.
- Observe vehicle stickers indicating high voltage components. Before carrying out repairs, discharge residual voltage.
- Wires from airbag and belt tensioner wiring harness should only be repaired using wiring harness repair set -V.A.G 1978- .

⇒ Operating instructions from wiring harness repair set -V.A.G 1978-

⇒ Body; General body repairs, interior; Rep. Gr. 69 ; Passenger protection

2.2 General notes concerning repairs to vehicle electrical system

- Observe current instructions (also notes concerning removing and installing components) in workshop manuals and in the Technical Service Handbook.
- Yellow wiring and sections of wiring harness wrapped in yellow tape indicate a prior repair.

⇒ Operating instructions from wiring harness repair set -V.A.G 1978-

- Before beginning repairs to a wiring harness, first rectify the cause of the damage, e.g. sharp edges on a body part, defective electrical consumer, corrosion.
- Disconnecting the battery earth strap (open circuit) provides a safe working environment for repairs to the electrical system. The battery positive wire need only be disconnected for removal of the battery.
- To disconnect and connect the battery, the procedure described in the workshop manual should be strictly adhered to .
- If possible, do not loosen any earth wires from the body (danger of corrosion).

2.3 Notes on repairs to wiring harness and connectors

Supplementary notes on repair of CAN bus wiring ⇒ page 153

- Soldering is not permitted for repairs to vehicle wiring.
- Never repair any welded connections. If necessary, lay wiring parallel to the defective wiring.
- Wiring harness and connector repairs to vehicle electrical system should be carried out using wiring harness repair set -V.A.G 1978- only.

Protected by copyright. Copying for private or commercial purposes, in part or in whole, is not permitted unless authorised by Volkswagen AG. Volkswagen AG does not guarantee or accept any liability with respect to the correctness of information in this document. Copyright by Volkswagen AG.
satelettronica

⇒ Operating instructions from wiring harness repair set -V.A.G 1978-

- Perform wiring harness repairs only with yellow wires. Mark repair locations with yellow tape.
- Screened wires must not be repaired. If damaged they must be replaced complete.

2.4 Supplementary notes on repair of CAN bus wiring

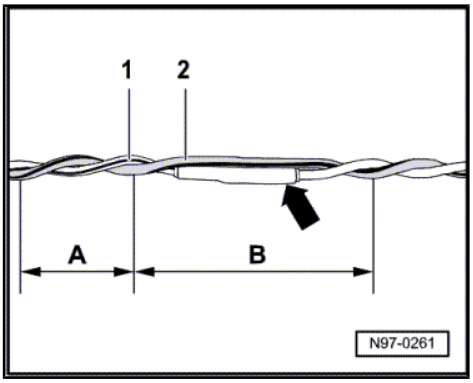

- An unshielded two-wire line -1- and -2- with a cross section of 0.35 mm^2 or 0.5 mm^2 is used for CAN bus wiring.
- The colour codes of the CAN bus wiring can be gleaned from the following table:

Powertrain CAN, high	orange/black
Convenience CAN, high	orange/green
Infotainment CAN, high	orange/violet
CAN low wire, (all)	orange/brown

- Perform wiring harness repairs only with yellow wires. Mark repair locations with yellow tape.
- When repairs are performed, both bus wires must have the same length. When wires -1- and -2- are twisted together, the twist spacing should be A=20 mm.
- No section of wiring greater than B=50 mm, e.g. in the vicinity of heat-shrink sleeves -arrow-, should not be twisted.

2.5 Wiring harness repair set -V.A.G 1978-

Protected by copyright. Copying for private or commercial purposes, in part or in whole, is not permitted unless authorised by Volkswagen AG. Volkswagen AG does not guarantee or accept any liability with respect to the correctness of information in this document. Copyright by Volkswagen AG.
satelettronica

- Repairs to wiring harnesses and connectors of the onboard electrical supply system should only be carried out using wiring harness repair set -V.A.G 1978- .

- Included with the wiring harness repair set -V.A.G 1978- is a set of operating instructions, which provides comprehensive information on how to conduct repairs.

- Further information, e.g. removal and installation of parts and components, appears in the relevant workshop manual.

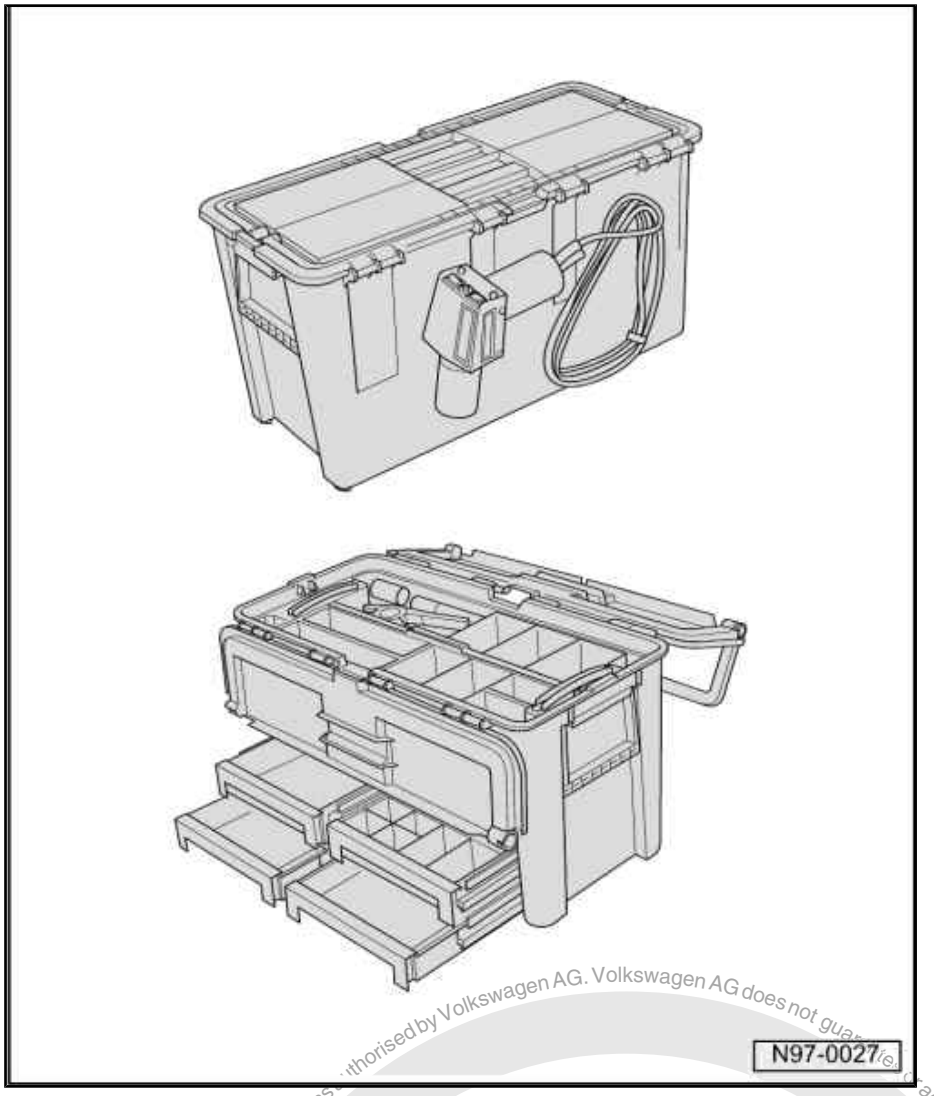

Protected by copyright. Copying for private or commercial purposes, in part or in whole, is not permitted unless authorised by Volkswagen AG. Volkswagen AG does not guarantee or accept any liability with respect to the correctness of information in this document. Copyright by Volkswagen AG.
satelettronica

3 Renewal of aerial wiring

A new repair concept has been developed for repair work on aerial wires. Now connecting wires in different lengths and various adapter cables are available as replacement parts instead of a complete aerial wire.

3.1 General description

- Aerial wires must not be repaired, but if repair is required, they must be replaced only by connecting wires and adapter cables offered as genuine parts.
- Replacement parts can be found in the electronic parts catalogue (EKTA): Special catalogue; Electrical connections; Genuine accessories; Subgroup 35 from illustration No. 035-20.
- These genuine parts are suitable for all aerial wires and wire diameters which may need to be replaced.
- No provision has been made for replacement of individual aerial connectors in the event of repair.
- The wires can be used retroactively for all VW models, with all installed aerial wire diameters.
- All adapter and connection wires are suitable for all transmitter and receiver signals.
- This repair method can also be used for testing or retrofitting.

3.2 Assembly overview - aerial wire

Example – aerial cable between radio and aerial is defective. The following wires are required for the repair:

1 - Adapter cable, to radio connection. Length approx. 30 cm.

2 - Connecting wire, available in different lengths.

3 - Adapter cable, to aerial connection. Length approx. 30 cm.

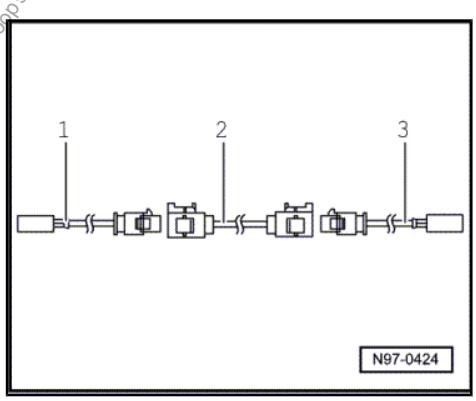

3.3 Installing a new aerial wire

Note

Note that the total length of an aerial cable, depending on vehicle equipment level, can be divided into sections by aerial diversity control unit, traffic information control unit or aerial amplifier. Only the defective section of aerial wire must be replaced.

– Pull defective aerial wire connections off units.

– Determine the routing of the defective aerial wire in vehicle and measure the total length of the aerial connecting wire to be replaced.

satelettronica

The total length of aerial connecting wire is the sum of the length of adapter cables required -1- and -3- and the connecting wire -2-.

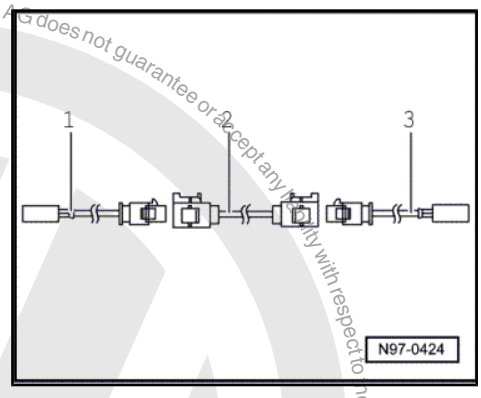

– To determine the length of connecting wire required, subtract 60 cm from the measured total length of aerial connecting wire -2-.

– Procure the required adapter cables -1- and -3- and connecting wire -2- at length calculated as genuine part from the parts catalogue.

– Cut off connectors of defective aerial wire.

The remainder of the defective aerial wire remains in the vehicle.

– Connect adapter cables -1- and -3- to equipment in vehicle.

– Route and secure connecting wire -2- parallel to the old aerial wire.

Note

Do not kink or excessively bend aerial wires! The bending radius must not be below 50 mm.

– Connect connecting wire to adapter cables.

– Perform a functional check.

Protected by copyright. Copying for private or commercial purposes, in part or in whole, is not permitted unless authorised by Volkswagen AG. Volkswagen AG does not guarantee or accept any liability with respect to the correctness of information in this document. Copyright by Volkswagen AG.

satelettronica